Cat. No. W348-E1-06

DRT1-COM
GT1 Series

# DeviceNet
# MULTIPLE I/O TERMINAL

# OPERATION MANUAL

OMRON

# DRT1-COM
# GT1 Series
# DeviceNet
# MULTIPLE I/O TERMINAL

## Operation Manual

*Revised September 2010*

# Notice:

OMRON products are manufactured for use according to proper procedures by a qualified operator and only for the purposes described in this manual.

The following conventions are used to indicate and classify precautions in this manual. Always heed the information provided with them. Failure to heed precautions can result in injury to people or damage to property.

**⚠ DANGER** Indicates an imminently hazardous situation which, if not avoided, will result in death or serious injury.

**⚠ WARNING** Indicates a potentially hazardous situation which, if not avoided, could result in death or serious injury.

**⚠ Caution** Indicates a potentially hazardous situation which, if not avoided, may result in minor or moderate injury, or property damage.

# OMRON Product References

All OMRON products are capitalized in this manual. The word “Unit” is also capitalized when it refers to an OMRON product, regardless of whether or not it appears in the proper name of the product.

The abbreviation “Ch,” which appears in some displays and on some OMRON products, often means “word” and is abbreviated “Wd” in documentation in this sense.

# Visual Aids

The following headings appear in the left column of the manual to help you locate different types of information.

**Note** Indicates information of particular interest for efficient and convenient operation of the product.

***1,2,3...*** 1. Indicates lists of one sort or another, such as procedures, checklists, etc.

# Trademarks and Copyrights

COMBICON is a registered trademark of Phoenix Contact K.K.

DeviceNet is a registered trademark of the Open DeviceNet Vendor Association, Inc.

PowerTap is a registered trademark of the Allen-Bradley Company, Inc.

**© OMRON, 1998**

All rights reserved. No part of this publication may be reproduced, stored in a retrieval system, or transmitted, in any form, or by any means, mechanical, electronic, photocopying, recording, or otherwise, without the prior written permission of OMRON.

No patent liability is assumed with respect to the use of the information contained herein. Moreover, because OMRON is constantly striving to improve its high-quality products, the information contained in this manual is subject to change without notice. Every precaution has been taken in the preparation of this manual. Nevertheless, OMRON assumes no responsibility for errors or omissions. Neither is any liability assumed for damages resulting from the use of the information contained in this publication.

# TABLE OF CONTENTS


**PRECAUTIONS . . . . . ix**

1 Intended Audience . . . . . x
2 General Precautions . . . . . x
3 Safety Precautions . . . . . x
4 Operating Environment Precautions . . . . . x
5 Application Precautions . . . . . xi
6 EC Directives . . . . . xiii

**SECTION 1**
**MULTIPLE I/O TERMINAL . . . . . 1**

1-1 MULTIPLE I/O TERMINAL . . . . . 2
1-2 Functions . . . . . 8

**SECTION 2**
**Hardware Setup and Operational Check . . . . . 19**

2-1 Basic Procedure . . . . . 20
2-2 Specific Example . . . . . 21

**SECTION 3**
**Sample Programs . . . . . 27**

3-1 Examples of Counter Unit Operation . . . . . 28

**SECTION 4**
**Basic I/O Unit Specifications . . . . . 35**

4-1 Communications Unit . . . . . 36
4-2 Specifications Common to All Basic I/O Units . . . . . 40
4-3 Transistor Input Units . . . . . 44
4-4 Transistor Output Units . . . . . 66
4-5 Relay Output Units . . . . . 90

**SECTION 5**
**Special I/O Unit Specifications . . . . . 97**

5-1 Analog Input Units . . . . . 98
5-2 Analog Output Units . . . . . 124
5-3 GT1-TS04T and GT1-TS04P Temperature Input Units . . . . . 148
5-4 GT1-CT01 Counter Unit . . . . . 172

**SECTION 6**
**Communications Timing . . . . . 189**

6-1 Remote I/O Communications Characteristics . . . . . 190

**SECTION 7**
**Troubleshooting and Maintenance . . . . . 195**

7-1 Normal Indication . . . . . 196
7-2 Troubleshooting . . . . . 197
7-3 Maintenance . . . . . 204

**Index . . . . . 221**

**Revision History . . . . . 223**

# TABLE OF CONTENTS

# About this Manual:

This manual describes the operation of the DeviceNet MULTIPLE I/O TERMINAL and includes the sections described below.

Please read this manual carefully and be sure you understand the information provided before attempting to operate the MULTIPLE I/O TERMINAL.

***Section 1*** provides an overview of the MULTIPLE I/O TERMINAL, including its features and functions.

***Section 2*** provides the basic procedure for operation and includes an actual example.

***Section 3*** provides some examples of programs used with the Counter Unit.

***Section 4*** provides the basic specifications for the I/O Units including Communications Units, Transistor Input and Output Units, and Relay Output Units.

***Section 5*** provides the specifications for Special I/O Units, including the Analog Input Unit, the Analog Output Unit, the Temperature Input Unit, and the Counter Unit. Setting procedures for a Configurator are also provided.

***Section 6*** provides characteristics for communications in the DeviceNet Unit and describes how to calculate the times required for communications between Units.

***Section 7*** provides procedures for dealing with errors as well as basic maintenance procedures.

The ***Appendices*** provide Slave device profiles and lists of connectable devices.

**⚠ WARNING** Failure to read and understand the information provided in this manual may result in personal injury or death, damage to the product, or product failure. Please read each section in its entirety and be sure you understand the information provided in the section and related sections before attempting any of the procedures or operations given.

# Read and Understand this Manual

Please read and understand this manual before using the product. Please consult your OMRON representative if you have any questions or comments.

# Warranty and Limitations of Liability

| WARRANTY |
| --- |
| OMRON's exclusive warranty is that the products are free from defects in materials and workmanship for a period of one year (or other period if specified) from date of sale by OMRON.<br><br>OMRON MAKES NO WARRANTY OR REPRESENTATION, EXPRESS OR IMPLIED, REGARDING NON-INFRINGEMENT, MERCHANTABILITY, OR FITNESS FOR PARTICULAR PURPOSE OF THE PRODUCTS. ANY BUYER OR USER ACKNOWLEDGES THAT THE BUYER OR USER ALONE HAS DETERMINED THAT THE PRODUCTS WILL SUITABLY MEET THE REQUIREMENTS OF THEIR INTENDED USE. OMRON DISCLAIMS ALL OTHER WARRANTIES, EXPRESS OR IMPLIED. |

| LIMITATIONS OF LIABILITY |
| --- |
| OMRON SHALL NOT BE RESPONSIBLE FOR SPECIAL, INDIRECT, OR CONSEQUENTIAL DAMAGES, LOSS OF PROFITS OR COMMERCIAL LOSS IN ANY WAY CONNECTED WITH THE PRODUCTS, WHETHER SUCH CLAIM IS BASED ON CONTRACT, WARRANTY, NEGLIGENCE, OR STRICT LIABILITY.<br><br>In no event shall the responsibility of OMRON for any act exceed the individual price of the product on which liability is asserted.<br><br>IN NO EVENT SHALL OMRON BE RESPONSIBLE FOR WARRANTY, REPAIR, OR OTHER CLAIMS REGARDING THE PRODUCTS UNLESS OMRON'S ANALYSIS CONFIRMS THAT THE PRODUCTS WERE PROPERLY HANDLED, STORED, INSTALLED, AND MAINTAINED AND NOT SUBJECT TO CONTAMINATION, ABUSE, MISUSE, OR INAPPROPRIATE MODIFICATION OR REPAIR. |

# Application Considerations

## SUITABILITY FOR USE

OMRON shall not be responsible for conformity with any standards, codes, or regulations that apply to the combination of products in the customer's application or use of the products.

At the customer's request, OMRON will provide applicable third party certification documents identifying ratings and limitations of use that apply to the products. This information by itself is not sufficient for a complete determination of the suitability of the products in combination with the end product, machine, system, or other application or use.

The following are some examples of applications for which particular attention must be given. This is not intended to be an exhaustive list of all possible uses of the products, nor is it intended to imply that the uses listed may be suitable for the products:

- Outdoor use, uses involving potential chemical contamination or electrical interference, or conditions or uses not described in this manual.
- Nuclear energy control systems, combustion systems, railroad systems, aviation systems, medical equipment, amusement machines, vehicles, safety equipment, and installations subject to separate industry or government regulations.
- Systems, machines, and equipment that could present a risk to life or property.

Please know and observe all prohibitions of use applicable to the products.

NEVER USE THE PRODUCTS FOR AN APPLICATION INVOLVING SERIOUS RISK TO LIFE OR PROPERTY WITHOUT ENSURING THAT THE SYSTEM AS A WHOLE HAS BEEN DESIGNED TO ADDRESS THE RISKS, AND THAT THE OMRON PRODUCTS ARE PROPERLY RATED AND INSTALLED FOR THE INTENDED USE WITHIN THE OVERALL EQUIPMENT OR SYSTEM.

## PROGRAMMABLE PRODUCTS

OMRON shall not be responsible for the user's programming of a programmable product, or any consequence thereof.

# Disclaimers

## CHANGE IN SPECIFICATIONS

Product specifications and accessories may be changed at any time based on improvements and other reasons.

It is our practice to change model numbers when published ratings or features are changed, or when significant construction changes are made. However, some specifications of the products may be changed without any notice. When in doubt, special model numbers may be assigned to fix or establish key specifications for your application on your request. Please consult with your OMRON representative at any time to confirm actual specifications of purchased products.

## DIMENSIONS AND WEIGHTS

Dimensions and weights are nominal and are not to be used for manufacturing purposes, even when tolerances are shown.

## PERFORMANCE DATA

Performance data given in this manual is provided as a guide for the user in determining suitability and does not constitute a warranty. It may represent the result of OMRON's test conditions, and the users must correlate it to actual application requirements. Actual performance is subject to the OMRON Warranty and Limitations of Liability.

## ERRORS AND OMISSIONS

The information in this manual has been carefully checked and is believed to be accurate; however, no responsibility is assumed for clerical, typographical, or proofreading errors, or omissions.

# PRECAUTIONS

This section provides general precautions for using the Programmable Controller (PLC) Systems and related devices.

**The information contained in this section is important for the safe and reliable application of PLC Systems. You must read this section and understand the information contained before attempting to set up or operate a PLC System.**


1 Intended Audience . . . . . x
2 General Precautions . . . . . x
3 Safety Precautions . . . . . x
4 Operating Environment Precautions . . . . . x
5 Application Precautions . . . . . xi
6 EC Directives . . . . . xiii

# 1 Intended Audience

This manual is intended for the following personnel, who must also have knowledge of electrical systems (an electrical engineer or the equivalent).

- Personnel in charge of installing FA systems.
- Personnel in charge of designing FA systems.
- Personnel in charge of managing FA systems and facilities.

# 2 General Precautions

The user must operate the product according to the performance specifications described in the operation manuals.

Before using the product under conditions which are not described in the manual or applying the product to nuclear control systems, railroad systems, aviation systems, vehicles, combustion systems, medical equipment, amusement machines, safety equipment, and other systems, machines, and equipment that may have a serious influence on lives and property if used improperly, consult your OMRON representative.

Make sure that the ratings and performance characteristics of the product are sufficient for the systems, machines, and equipment, and be sure to provide the systems, machines, and equipment with double safety mechanisms.

This manual provides information for programming and operating OMRON PLC Systems. Be sure to read this manual before attempting to use the software and keep this manual close at hand for reference during operation.

**⚠ WARNING** It is extremely important that a PLC System and all PLC Units be used for the specified purpose and under the specified conditions, especially in applications that can directly or indirectly affect human life. You must consult with your OMRON representative before applying a PLC System to the abovementioned applications.

# 3 Safety Precautions

**⚠ WARNING** Never attempt to disassemble any Units while power is being supplied. Doing so may result in serious electrical shock or electrocution.

**⚠ WARNING** Never touch any of the terminals while power is being supplied. Doing so may result in serious electrical shock or electrocution.

# 4 Operating Environment Precautions

Do not operate the control system in the following places.

- Locations subject to direct sunlight.
- Locations subject to temperatures or humidity outside the range specified in the specifications.
- Locations subject to condensation as the result of severe changes in temperature.
- Locations subject to corrosive or flammable gases.
- Locations subject to dust (especially iron dust) or salts.
- Locations subject to shock or vibration.
- Locations subject to exposure to water, oil, or chemicals.

- Take appropriate and sufficient countermeasures when installing systems in the following locations.
  - Locations subject to static electricity or other forms of noise.
  - Locations subject to strong electromagnetic fields.
  - Locations subject to possible exposure to radioactivity.
  - Locations close to power supplies.

⚠ **Caution** The operating environment of the PLC System can have a large effect on the longevity and reliability of the system. Improper operating environments can lead to malfunction, failure, and other unforeseeable problems with the PLC System. Be sure that the operating environment is within the specified conditions at installation and remains within the specified conditions during the life of the system.

# 5 Application Precautions

Observe the following precautions when using the MULTIPLE I/O TERMINAL.

⚠ **WARNING** Failure to abide by the following precautions could lead to serious or possibly fatal injury. Always heed these precautions.

- Always ground the system to 100 Ω or less when installing the system to protect against electrical shock.
- Always turn OFF the power supply to the system before attempting any of the following. Performing any of the following with the power supply turned ON may lead to electrical shock:
  - Mounting or removing any Units (e.g., Power Supply Unit, I/O Units, CPU Unit, etc.) or memory cassettes.
  - Assembling any devices or racks.
  - Connecting or disconnecting any cables, connectors, or wiring.

⚠ **Caution** Failure to abide by the following precautions could lead to faulty operation of or damage to the MULTIPLE I/O TERMINAL. Always heed these precautions.

- Use the Units only with the power supplies and voltages specified in the operation manuals. Other power supplies and voltages may damage the Units.
- Take measures to stabilize the power supply to conform to the rated supply if it is not stable.
- Provide circuit breakers and other safety measures to provide protection against shorts in external wiring.
- Do not apply voltages exceeding the rated input voltage to Input Units. The Input Units may be destroyed.
- Do not apply voltages exceeding the maximum switching capacity to Output Units. The Output Units may be destroyed.
- Always disconnect the LG terminal when performing withstand voltage tests.
- Install all Units according to instructions in the operation manuals. Improper installation may cause faulty operation.
- Be sure to tighten Backplane screws, terminal screws, and cable connector screws securely.
- Do not attempt to take any Units apart, to repair any Units, or to modify any Units in any way.

- Do not use communications cables or I/O cables in parallel to or close to high-tension, high-rate current carrying lines. Doing so may cause faulty operation.
- Be sure to install the MULTIPLE I/O TERMINAL in the proper direction. Not doing so may cause faulty operation.
- When attaching Units to the DIN track, be sure to attach them securely. Not doing so may cause the Units to be damaged.
- Use this product within the specified ranges for communications distances and connection distances. Not doing so may lead to faulty operation.
- Use the specified cables when making communications connections. Not doing so may cause faulty operation.
- Be sure to wire the communications paths, the communications power supplies, the internal power supplies, and the I/O power supplies correctly. Use voltages for the power supplies that are within the specified ranges. Not doing so may cause malfunction.
- Do not, under any circumstances, use this product with loads exceeding the contact rating values. Doing so may cause deterioration of insulation and damage.
- The life-expectancy of the relays depends greatly on the switching conditions. Before practical use of the product, perform a trial operation of the product in the actual conditions in which it will be used. Use the product at a switching frequency that will allow efficient operation. Continued use of the product in conditions causing reduced efficiency will cause deterioration of insulation and damage.
- Connection Cables
  - Before switching ON power supplies, check that the connectors are mounted securely.
  - Check that the connectors for the I/O Unit interfaces are securely locked.
- Tightening Torques
  Check that all the screws for the Units are tightened to the correct torque. Not doing so may cause faulty operation.
  - Internal power supplies, I/O power supplies, terminal screws: 0.3 to 0.5 N • m
  - Communications cable, communications connector screws: 0.25 to 0.35 N • m
  - High-density I/O Unit connector screws: 0.25 to 0.35 N • m
- Cleaning
  - Do not used thinner-based products for cleaning. Doing so may dissolve attachment areas or cause discoloration.
- Power Supply
  - Use separate power supplies for communications power supplies, internal power supplies, I/O power supplies, load power supplies, and encoder power supplies. Not doing so may lead to faulty operation.

⚠ **Caution** The following precautions are necessary to ensure the general safety of the system. Always heed these precautions.

- Provide double safety mechanisms to handle incorrect signals that can be generated by broken signal lines or momentary power interruptions.
- Provide external interlock circuits, limit circuits, and other safety circuits in addition to any provided within the PLC System to ensure safety.

# 6 EC Directives

The MULTIPLE I/O TERMINAL conforms to EMC as follows:

**EMC Directives**

OMRON devices that comply with EC Directives also conform to the related EMC standards so that they can be more easily built into other devices or the overall machine. The actual products have been checked for conformity to EMC standards (see the following note). Whether the products conform to the standards in the system used by the customer, however, must be checked by the customer.

EMC-related performance of the OMRON devices that comply with EC Directives will vary depending on the configuration, wiring, and other conditions of the equipment or control panel on which the OMRON devices are installed. The customer must, therefore, perform the final check to confirm that devices and the overall machine conform to EMC standards.

The MULTIPLE I/O TERMINAL products that comply with EC Directives must be installed as follows:

***1,2,3...***

1. MULTIPLE I/O TERMINAL products are designed for installation inside control panels. All MULTIPLE I/O TERMINAL products must be installed within control panels.
2. Used reinforced insulation or double insulation for the DC power supplies used for the communications power supply, internal circuit power supply, and the I/O power supplies.
3. MULTIPLE I/O TERMINAL products that meet EC Directives also meet the Common Emission Standard (EN61000-6-4). However, radiated emission (at 10 m) will vary with the overall configuration of the control panel, other devices connected to the control panel, and other conditions. You must therefore confirm that EC Directives are satisfied for the overall machine or device.
4. MULTIPLE I/O TERMINAL products that meet EC Directives have configurations with less than 30 m of I/O wiring, and less than 10 m of power supply wiring.

The following examples show means of reducing noise.

***1,2,3...***

1. Noise from the communications cable can be reduced by installing a ferrite core on the communications cable within 10 cm of the DeviceNet Master Unit.

**Ferrite Core (Data Line Filter): LF130B (Manufactured by Easy Magnet Co.)**

Impedance specifications
25 MHZ: 105 Ω
100 MHZ: 190 Ω

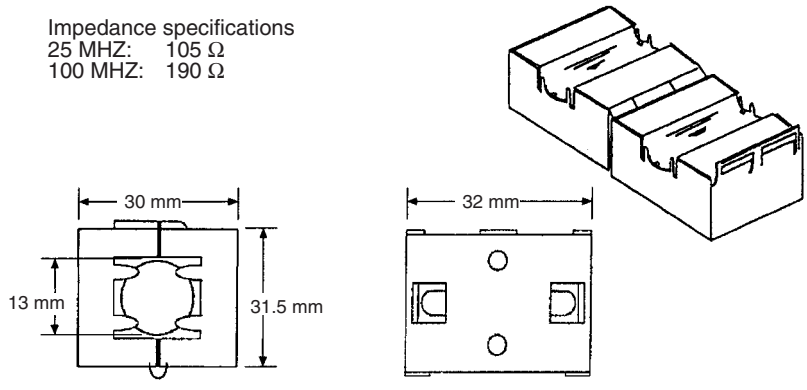


2. Wire the control panel with cables as thick and short as possible and ground to 100 Ω min.

3. Keep DeviceNet communications cables as short as possible and ground to 100 Ω min.

# SECTION 1
# MULTIPLE I/O TERMINAL

This section provides an overview of the MULTIPLE I/O TERMINAL, including its features and functions.


1-1 MULTIPLE I/O TERMINAL . . . . . 2
- 1-1-1 Overview . . . . . 2
- 1-1-2 System Configuration. . . . . 2
- 1-1-3 Features . . . . . 3
- 1-1-4 Communications Units and I/O Units . . . . . 4
- 1-1-5 List of Models . . . . . 5

1-2 Functions . . . . . 8
- 1-2-1 I/O Unit Interface Specifications . . . . . 8
- 1-2-2 Exchanging Data . . . . . 10
- 1-2-3 Allocating I/O . . . . . 11
- 1-2-4 I/O Unit Interface Status . . . . . 15
- 1-2-5 I/O Configuration Changes . . . . . 17

# 1-1 MULTIPLE I/O TERMINAL

## 1-1-1 Overview

A MULTIPLE I/O TERMINAL is a building-block DeviceNet Slave that consists of a Communications Unit that interfaces one or more I/O Units. The I/O Unit interface supports up to 8 I/O Units and a total of up to 1,024 I/O points. I/O Units are connected using simple snap-on connections via I/O Unit Connecting Cables. Allocation and address settings on the I/O Unit interface are not required, enabling simple, flexible distributed I/O control.

## 1-1-2 System Configuration

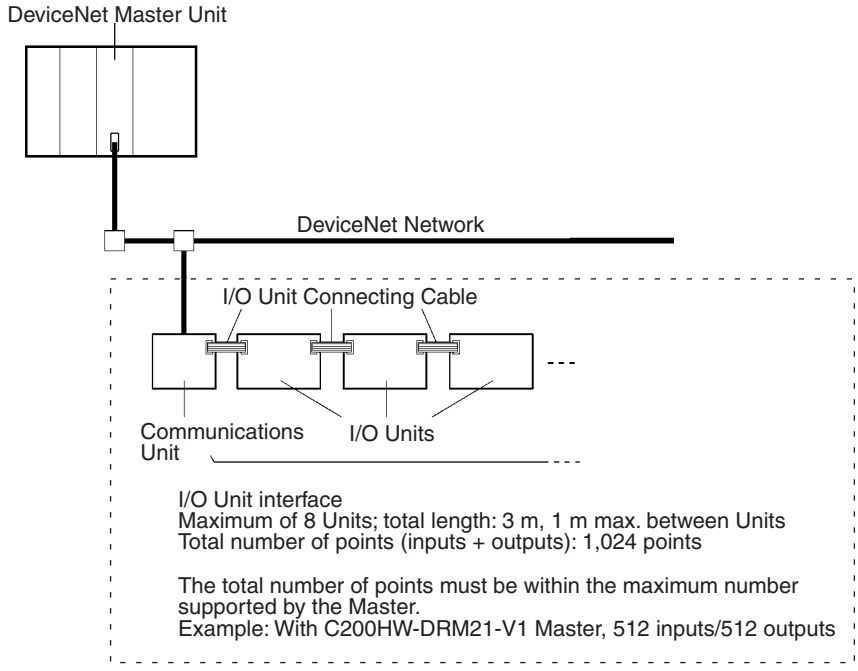

## 1-1-3 Features

**Simple Connections**

The Communications Unit and the I/O Units are separate, and the Communications Unit and the I/O Units are connected by an I/O Unit interface. I/O can be expanded simply by connecting additional I/O Units to the I/O Unit interface.

**Automatic Recognition of I/O Units**

When the power to the Communications Unit is turned ON, the models of the I/O Units on the I/O Unit interface are automatically recognized, and the number of remote I/O communications points with the DeviceNet Master Unit is automatically determined. This enables I/O to be increased or decreased simply by connecting or disconnecting I/O Units.

**Status Notification**

Status information about the I/O Unit interface can be transmitted as inputs to the DeviceNet Master Unit (two words).

**Many Types of I/O Unit**

The following I/O Units are available.

- 16- or 32-point Transistor Input Units (terminal block, connector, 25-pin D-sub connector, or high-density connector)
- 16- or 32-point Transistor Output Units (terminal block, connector, 25-pin D-sub connector, or high-density connector)
- 8-point/16-point Relay Output Unit (16-point Unit)
- 4- or 8-point Analog Input Unit (terminal block or connector)
- 4-point Analog Output Unit (terminal block or connector)
- 1-point Pulse Input Unit (high-speed counter)
- 4-point Temperature Input Unit

**An I/O-intensive System Can be Built at Low Cost**

Compared with fixed I/O Terminals, a high cost-performance ratio can be achieved if I/O Units are used.

**Range Setting by Configurator**

The input and output ranges for the Analog Input, Analog Output, and Temperature Input Units can be set for each point using the Configurator (with version 1.11 or later). Using DIP switches, ranges can be set in 2-point units for the Analog Input and Analog Output Units, and in 4-point units for the Temperature Input Unit.

## 1-1-4 Communications Units and I/O Units

**Communications Unit**

The Communications Unit interfaces the I/O Units to the DeviceNet.

- It controls the I/O Units in response to I/O refresh requests from the DeviceNet Master.
- It automatically recognizes the configuration of the I/O Units when the I/O Unit interface is initialized.
- It notifies the connection status or the status information for the I/O Units to the DeviceNet Master Unit.
- It provides a DIP switch to set the node number and baud rate of the MULTIPLE I/O TERMINAL as a DeviceNet Slave.

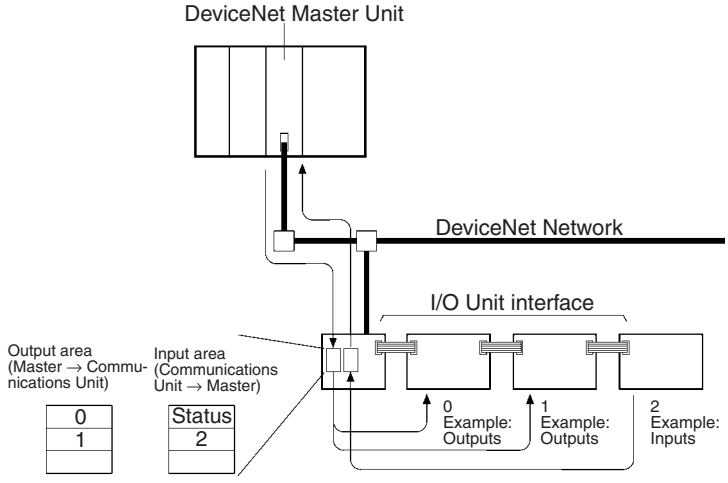


**I/O Units**

There are various I/O Units that can be connected to the I/O Unit interface.

- I/O Units are connected to the Communications Unit using an I/O Unit Connecting Cable (included with the I/O Unit). Connecting Cables with the following lengths are also available: 0.1, 0.3, 0.4, 0.5, 0.6, and 1.0 m (GCN1-010/030/040/050/060/100).
- No address or baud rate settings are required.
- The connection order of I/O Units is flexible.

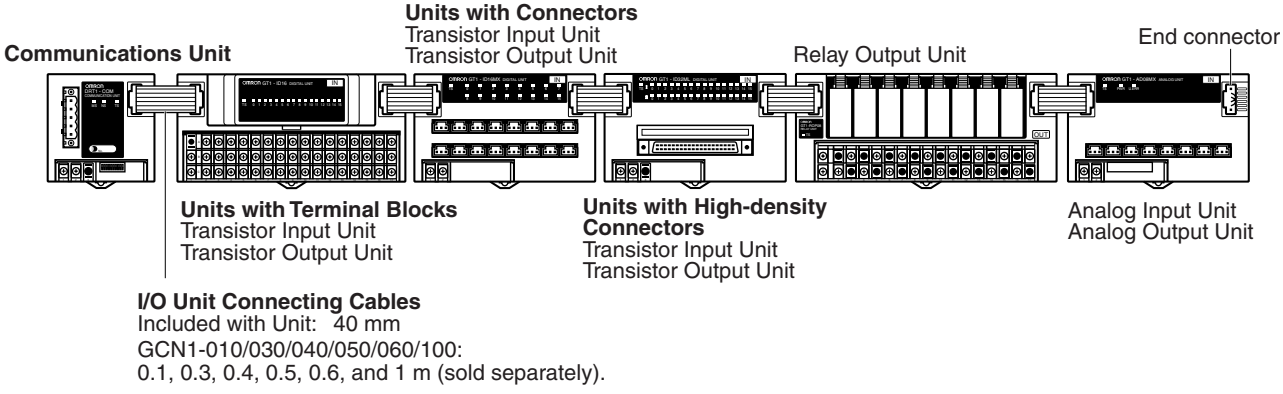

## 1-1-5 List of Models

| Unit | | I/O points | Words allocated in PLC memory | | I/O connections | Unit power supply voltage | Installa-tion | Model number | Remarks |
|---|---|---|---|---|---|---|---|---|---|
| | | | Input | Output | | | | | |
| Communications Unit | | None | Status two words | 0 words | None | 24 VDC (sup-plied from out-side) | DIN track | DRT1-COM | --- |
| Basic I/O Units | Transistor Input Units | 16 inputs | 1 word | 0 words | M3 terminal block | | | GT1-ID16<br>GT1-ID16-1 | NPN<br>PNP |
| | | 16 inputs | 1 word | 0 words | Connectors (made by MOLEX) | | | GT1-ID16MX<br>GT1-ID16MX-1 | NPN<br>PNP |
| | | 16 inputs | 1 word | 0 words | Connectors (made by FUJITSU) | | | GT1-ID16ML (See note 2.)<br>GT1-ID16ML-1 (See note 2.) | NPN<br>PNP |
| | | 16 inputs | 1 word | 0 words | Connectors (25-pin D-sub connec-tors) | | | GT1-ID16DS (See note 2.)<br>GT1-ID16DS-1 (See note 2.) | NPN<br>PNP |
| | | 32 inputs | 2 words | 0 words | High-density connector (made by FUJITSU) | | | GT1-ID32ML<br>GT1-ID32ML-1 | NPN<br>PNP |
| | Transistor Output Units | 16 out-puts | 0 words | 1 word | M3 terminal block | | | GT1-OD16<br>GT1-OD16-1 | NPN<br>PNP |
| | | 16 out-puts | 0 words | 1 word | Connectors (made by MOLEX) | | | GT1-OD16MX<br>GT1-OD16MX-1 | NPN<br>PNP |
| | | 16 out-puts | 0 words | 1 word | Connectors (made by FUJITSU) | | | GT1-OD16ML (See note 2.)<br>GT1-OD16ML-1 (See note 2.) | NPN<br>PNP |
| | | 16 out-puts | 0 words | 1 word | Connectors (25-pin D-sub connec-tors) | | | GT1-OD16DS (See note 2.)<br>GT1-OD16DS-1 (See note 2.) | NPN<br>PNP |
| | | 32 out-puts | 0 words | 2 words | High-density connector (made by FUJITSU) | | | GT1-OD32ML<br>GT1-OD32ML-1 | NPN<br>PNP |
| | Relay Out-put Units | 8 out-puts | 0 words | 1 word | M3 terminal block | | | GT1-ROP08 | --- |
| | | 16 out-puts | 0 words | 1 word | M3 terminal block | | | GT1-ROS16 | --- |

| Unit | | I/O points | Words allocated in PLC memory | | I/O connections | Unit power supply voltage | Installa-tion | Model number | Remarks |
|---|---|---|---|---|---|---|---|---|---|
| | | | Input | Output | | | | | |
| Special I/O Units (See note.) | Analog Input Units | 4 inputs | 4 words | 0 word | M3 terminal block | 24 VDC (sup-plied from out-side) | DIN track | GT1-AD04 (See note 2.) | Inputs: 4 to 20 mA, 0 to 20 mA, 0 to 5 V, 1 to 5 V, 0 to 10 V, –10 to 10 V |
| | | 8 inputs | 8 words | 0 word | Connectors (made by MOLEX) | | | GT1-AD08MX | |
| | Analog Output Units | 4 out-puts | 0 words | 4 words | M3 terminal block | | | GT1-DA04 (See note 2.) | Outputs: 4 to 20 mA, 0 to 5 V, 1 to 5 V, 0 to 10 V, –10 to 10 V |
| | | 4 out-puts | 0 words | 4 words | Connectors (made by MOLEX) | | | GT1-DA04MX | Outputs: 0 to 5 V, 1 to 5 V, 0 to 10 V, –10 to 10 V |
| | Tempera-ture Input Units | 4 inputs | 4 words (8 words depend-ing on mode) | 0 words | M3 terminal block | | | GT1-TS04T | Inputs: R, S, K, J, T, B, L |
| | | | | | | | | GT1-TS04P | Inputs: Pt100, JPt100 |
| | Counter Unit | 1 input | 3 words | 3 words | M3 terminal block | | | GT1-CT01 | 1 external input 2 external outputs |

**Note** The front-panel indicators and other parts of Analog Input Units, Analog Output Units, Temperature Input Units, and Counter Units differ from those of other I/O Units. These Units belong to a group called Special I/O Units.

An End Connector is included with the Communications Unit. A 40-mm I/O Unit Connecting Cable is included with an I/O Unit. I/O Unit Connecting Cables with the following lengths are also available: 0.1, 0.3, 0.4, 0.5, 0.6, and 1.0 m (GCN1-010/030/040/050/060/100, see following figure).

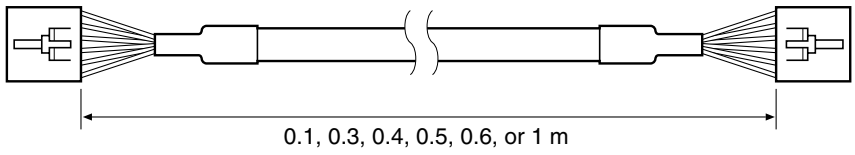

**Applicable Connectors**

The applicable connectors are shown in the following table.

| Connector | | | Model number | Remarks |
|---|---|---|---|---|
| Connectors made by MOLEX | Crimp | Housing | 51030-0330 (See note.) | |
| | | Reeled contacts | 70058-0004 | For AWG#24 to 30 |
| | | | 70058-0022 | For AWG#22 to 24 |
| | | Loose contacts | 70058-0204 (See note.) | For AWG#24 to 30 |
| | | | 70058-0272 | For AWG#22 to 24 |
| | | Crimping tool | 57036-5000 | For AWG#22 to 26 |
| | | | 57037-5000 (See note.) | For AWG#24 to 30 |
| Connectors made by FUJITSU corresponding to 16-point connectors | Soldered | | FCN361J024-AU | |
| | Pressure-welded | | FCN367J024-AU/F | |
| | Crimp | | FCN363J024-AU | |
| Recommended connectors corresponding to 25-pin D-sub connectors | Hood | | XW2S-2513 | OMRON |
| | Plug | | XW2A-2501 | OMRON |
| Connectors made by FUJITSU corresponding to high-density connectors | Soldered | | FCN361J040-AU | |
| | Pressure-welded | | FCN367J040-AU/F | |
| | Crimp | | FCN363J040-AU | |

**Note** Refer to page 219, *High-density Connector Cables for MULTIPLE I/O TERMINALs* for details.

# 1-2 Functions

## 1-2-1 I/O Unit Interface Specifications

| Item | | Specification |
|---|---|---|
| Communications method | | Special protocol |
| Number of I/O Units | | 8 Units max. |
| Maximum number of points | | Total inputs/outputs: 1,024 points (bits) |
| Communications distance | Total length | 3 m max. |
| | Between Units | 1 m max. (Cable included with Unit is 40 mm.) |
| Communications power supply | | Supplied from the Communications Unit to the I/O Unit (0.4 A max.) |
| Relationship to DeviceNet | | After the I/O Unit interface is established, DeviceNet communications continue normally, even if an error occurs on the I/O Unit interface. |
| Addresses | | Automatically recognized when the power to the Communications Unit is turned ON. |
| I/O configuration | | Automatically recognized when the power to the Communications Unit is turned ON. If the configuration is changed while the power supply is ON, a configuration error will occur. |
| Self-diagnostic functions | Configuration errors | The I/O Unit configuration is constantly checked while power is supplied. If a mismatch occurs while the power is turned ON, I/O refreshing for all I/O Units is stopped. |
| | Special I/O Unit errors | Errors are detected in the Special I/O Units (Analog Input Units, Analog Output Units, Temperature Input Units, and Counter Units) on the I/O Unit interface. |
| | I/O Unit interface errors | Communications stop when there is no communications response from an I/O Unit.<br>Communications stop when there is no specific response from the last I/O Unit (terminator).<br>Communications stop when nine or more I/O Units are connected. |
| | Power supply overload to I/O Units | The power supply to the I/O Units and I/O refreshing for all I/O Units are stopped when the power supply to the I/O Units through the Communications Unit exceeds 0.4 A. |
| Error detection | | Frame error check; CRC-CCITT check |

**I/O Interface Current Consumption**

Make sure that the power supply from the Communications Unit to the I/O Units is less than the total rated output current (400 mA). The I/O interface current consumption for each I/O Unit is shown in the following table.

| I/O Unit | I/O interface current consumption |
|---|---|
| GT1-ID16(-1) | 35 mA max. |
| GT1-ID16MX(-1) | 35 mA max. |
| GT1-ID16ML(-1) | 35 mA max. |
| GT1-ID16DS(-1) | 35 mA max. |
| GT1-ID32ML(-1) | 55 mA max. |
| GT1-OD16(-1) | 35 mA max. |
| GT1-OD16MX(-1) | 35 mA max. |
| GT1-OD16ML(-1) | 35 mA max. |
| GT1-OD16DS(-1) | 35 mA max. |
| GT1-OD32ML(-1) | 65 mA max. |
| GT1-ROP08 | 40 mA max. |
| GT1-ROS16 | 50 mA max. |
| GT1-AD04 | 50 mA max. |
| GT1-AD08MX | 50 mA max. |
| GT1-DA04 | 50 mA max. |
| GT1-DA04MX | 50 mA max. |
| GT1-TS04T | 50 mA max. |
| GT1-TS04P | 50 mA max. |
| GT1-CT01 | 90 mA max. |

**Calculation Example**

When five GT1-ID32ML Input Units and three GT1-OD16 Output Units are used, the total current consumption is calculated as follows:

(GT1-ID32ML current consumption) x 5 Units
+ (GT1-OD16 current consumption) x 3 Units
= 55 mA x 5 + 35 mA x 3 = 380 mA ≤ 400 mA

**I/O Unit Interface Addresses**

The addresses of the I/O Units on the I/O Unit interface are automatically set when the Communications Unit is started. The addresses are from 0 to 7 in ascending order from the I/O Units closest to the Communications Unit.

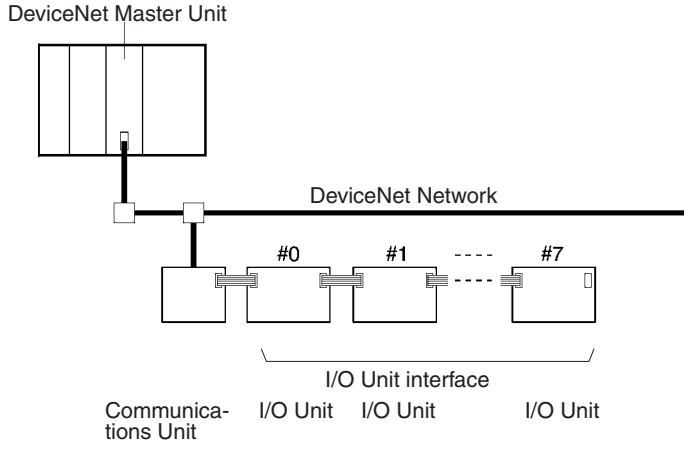


**Checking the I/O Unit Interface Status**

The following two methods are used to check the I/O Unit interface status:

- Checking the Communications Unit and I/O Unit indicators
- Checking the status of the Communications Unit

**Indicators**

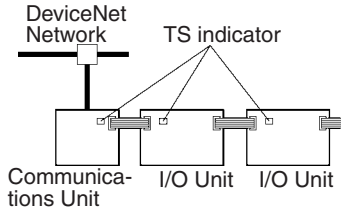


| Unit | Normal | Error |
|---|---|---|
| Communications Unit | TS Indicator: Lit green | TS indicator<br>I/O Unit interface error: Lit red<br>Special I/O Unit error: Flashing green<br>Maximum power supply overload to I/O Units: Not lit |
| I/O Units | TS indicator: Lit green<br>U.ERR indicator: Not lit<br>PWR indicator: Lit green | TS indicator<br>I/O Unit interface error: Lit red<br>U.ERR indicator<br>Special I/O Unit error: Lit red<br>PWR indicator<br>No internal power supply: Not lit |

For details, refer to page 199, *Troubleshooting via Indicators*.

**Checking the I/O Unit Interface Status**

The first two words of the CPU Unit allocation input area are always allocated to the status of the I/O Unit interface via the DeviceNet.

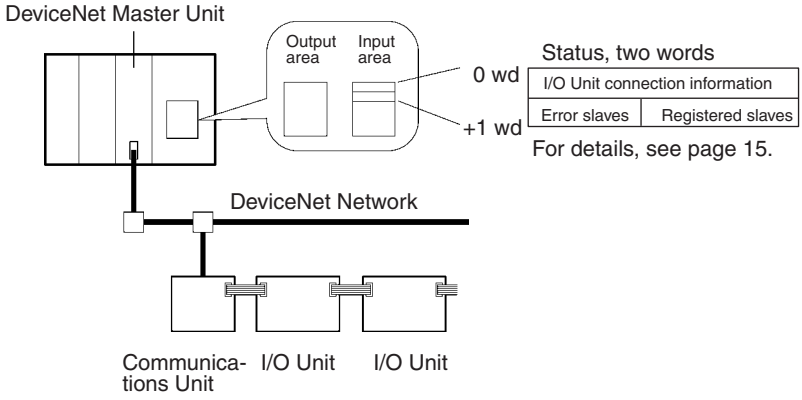


## 1-2-2 Exchanging Data

**Initialization**

When the Communications Unit is started, it automatically recognizes the configuration of the I/O Units and registers this status as the normal configuration (in RAM memory). At the same time, addresses 0 to 7 are allocated to the I/O Units in ascending order from the I/O Unit closest to the Communications Unit. These processes are performed each time the power is turned ON.

Remote I/O communications with the DeviceNet Master Unit are carried out by a MULTIPLE I/O TERMINAL based on the registered configuration. When the power to the Communications Unit is turned ON, the bits allocated to the I/O Units can be used to check the status (bits 0 to 7 of the first word) of the Communications Unit.

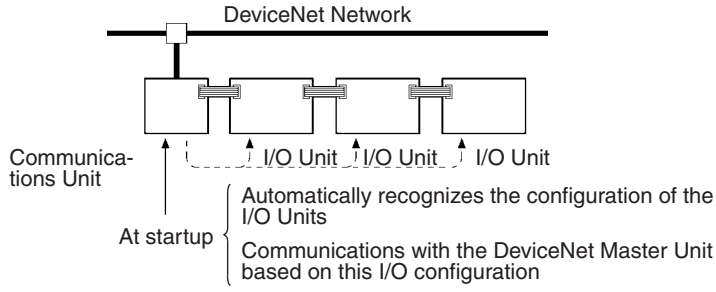


**Note**

1. If the configuration of the I/O Units is to be changed, a number of precautions must be noted. For details, see *1-2-5 I/O Configuration Changes*.
2. For details of data exchange timing, see *6-1-1 I/O Response Time.*

**Error Processing**

Even if an error occurs in the I/O Unit interface after initialization is completed, DeviceNet communications will continue normally. Therefore, an error processing program section must be included in the CPU Unit to check the status of the Communications Unit for errors that have occurred and to identify the error type and location.

## 1-2-3 Allocating I/O

This section explains how words for a MULTIPLE I/O TERMINAL are allocated in the output area and input area of the Master. For details of remote I/O functions in the output area and input area of the Master such as word specification, fixed allocation, and user-set allocation, refer to the *DeviceNet Operation Manual (W267)*.

**Fixed Allocation**

The output area and input area corresponding to the Communications Unit node number for a MULTIPLE I/O TERMINAL are as shown in the following diagram.

**Output Area**

The output area contains output bits in the order that I/O Units are connected on the I/O Unit interface.

**Input Area**

The input area contains the Communications Unit status (two words), and input bits in the order that I/O Units are connected on the I/O Unit interface.

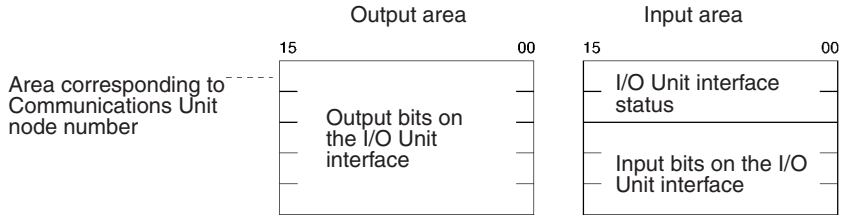


The input and output bits for the I/O Unit interface are allocated in the DeviceNet input and output areas in 16-point (one word) increments. With 8-point I/O Units, these bits are allocated using the rightmost byte (bits 0 to 7), and the leftmost byte (bits 8 to 15) will be 00 Hex.

**Example: CVM1/CV Series**

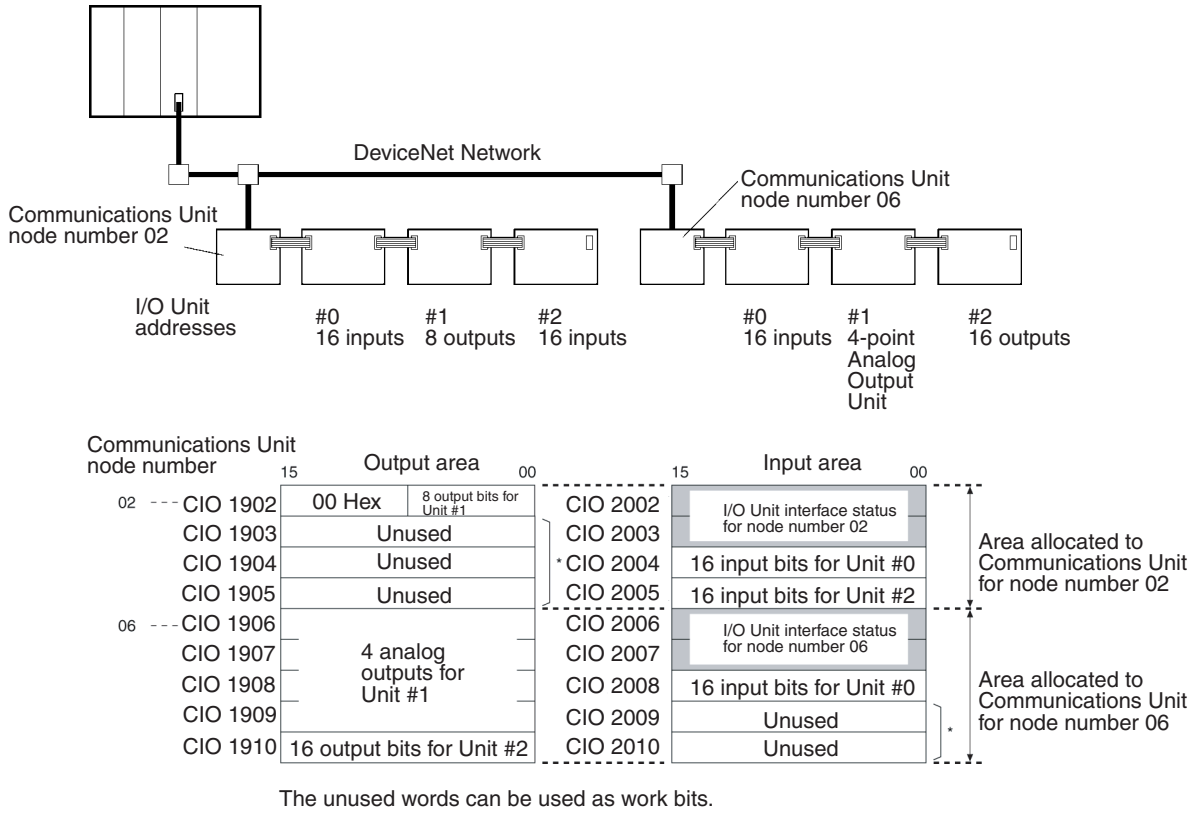


The unused words can be used as work bits.

**Example: C200HX/HG/HE**

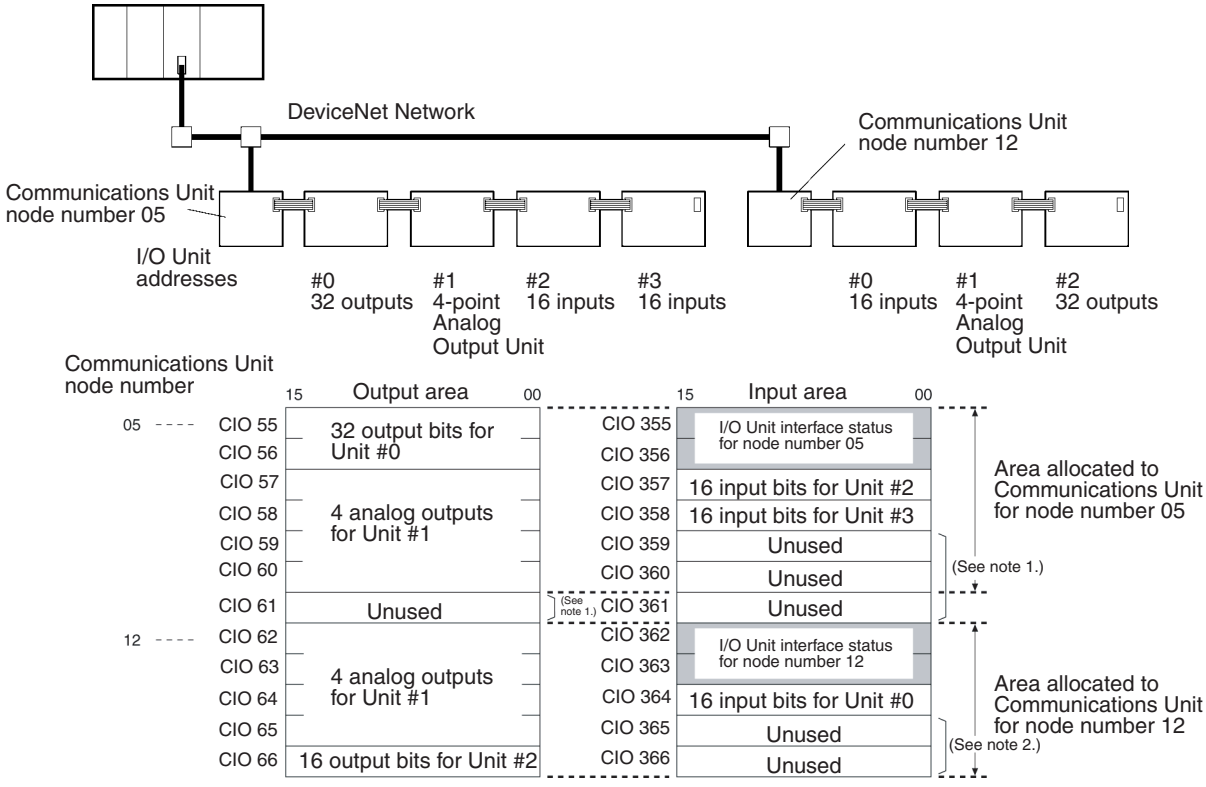


**Note 1.** The unused words between I/O areas that are used cannot be used as work bits.

**2.** The unused words (not between I/O areas that are used) can be used as work bits.

**User-set Allocation**

The Configurator can be used to set the Communications Unit node number, first word, and number of bytes to allocate (allocation size) for input block 1 and 2 and for output block 1 and 2, as shown in the following diagram.

Output block 1 or 2: Output bits in the order I/O Units are connected on the I/O Unit interface

Input block 1 or 2: I/O Unit interface status (two words), and input bits in the order I/O Units are connected on the I/O Unit interface

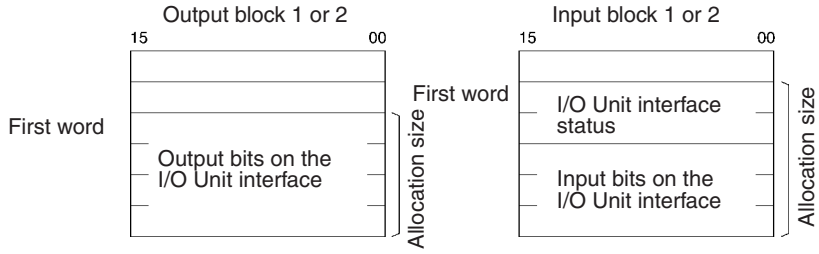


**Example: CVM1/CV Series**

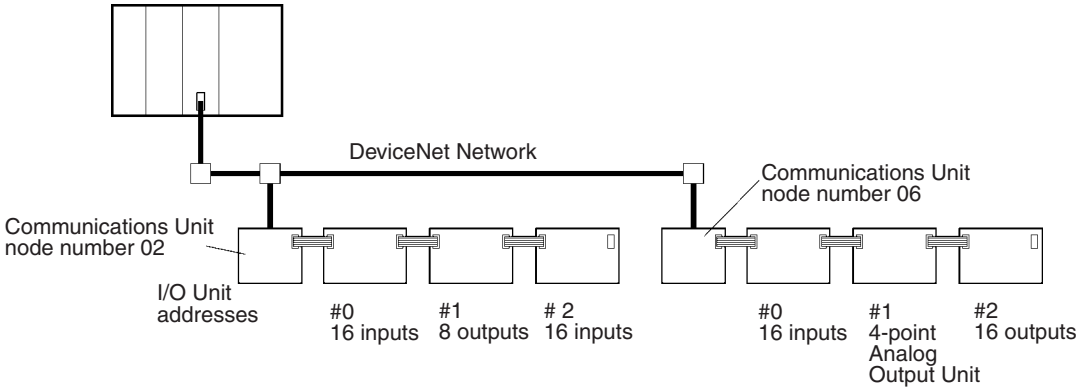


Allocation settings for node number 02
First word: CIO 1952
Allocation size: 2 bytes (1 word)

Allocation settings for node number 06
First word: CIO 1954
Allocation size: 10 bytes (5 words)

Allocation settings for node number 02
First word: CIO 1904
Allocation size: 8 bytes (4 words)

Allocation settings for node number 06
First word: CIO 1901
Allocation size: 6 bytes (3 words)

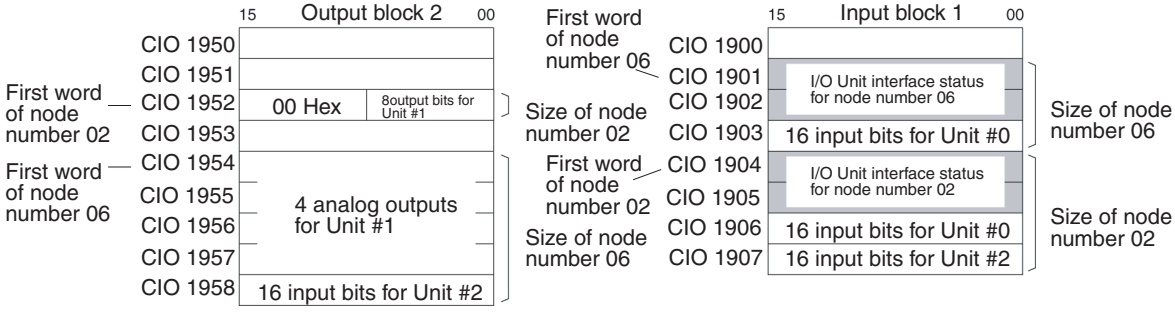

**Example: C200HX/HG/HE Series**

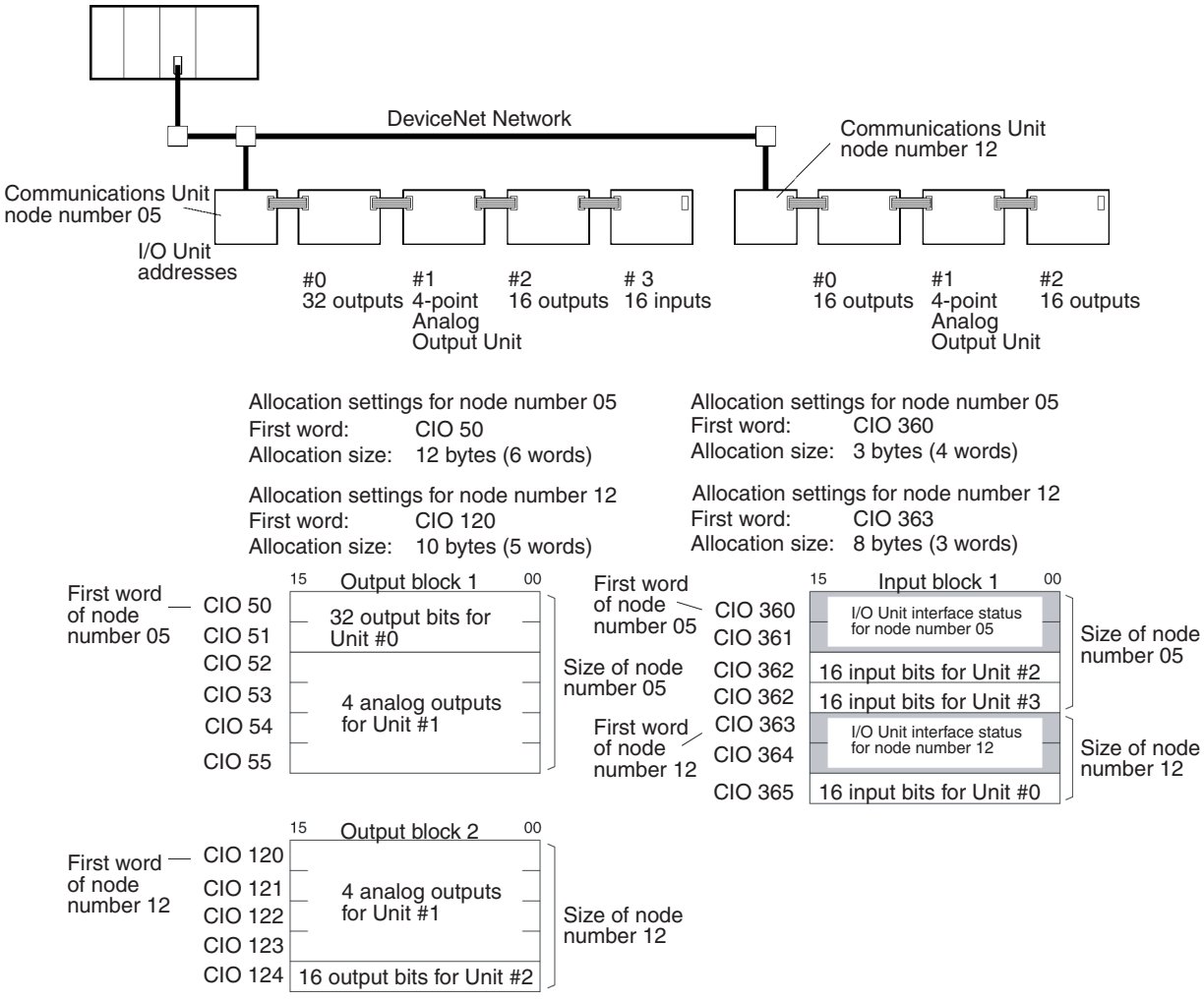

**Allocation Precautions**

Note the following precautions when starting the DeviceNet Network.

**Limits on the Total Number of Input and Output Points for a Master Unit**

A maximum of 1,024 inputs and outputs can be controlled by one Communications Unit (DRT1-COM). The number of I/O points for each node, however, depends on the Master Unit. For example, with the CV-series Master Unit (CVM1-DRM21-V1) or the C200HX/HG/HE and C200HS Master Unit (C200HW-DRM21-V1), up to 512 inputs and up to 512 outputs can be used at each node. Therefore, connect I/O Units within a range that does not exceed the number of I/O points for each Master Unit node. The following table shows the I/O size of each Unit.

| Unit model | Number of inputs | Number of outputs |
|---|---|---|
| DRT1-COM | 32 points | 0 point |
| GT1-ID16(-1), GT1-ID16MX(-1), GT1-ID16ML(-1)*, GT1-ID16DS(-1)* | 16 points | 0 point |
| GT1-OD16(-1), GT1-OD16MX(-1), GT1-OD16ML(-1)*, GT1-OD16DS(-1)*, GT1-ROS16, GT1-ROP08 | 0 points | 16 points |
| GT1-ID32ML(-1) | 32 points | 0 point |
| GT1-OD32ML(-1) | 0 points | 32 points |
| GT1-AD04* | 64 points | 0 points |
| GT1-AD08MX (With 8-input mode) | 128 points | 0 points |
| GT1-AD08MX (With 4-input mode) | 64 points | 0 points |
| GT1-DA04*, GT1-DA04MX | 0 points | 64 points |
| GT1-TS04T, GT1-TS04P (With Normal Mode) | 64 points | 0 points |
| GT1-TS04T, GT1-TS04P (With 2-decimal-place Mode) | 128 points | 0 points |
| GT1-CT01 | 48 points | 48 points |

The GT1-ROP08 (Relay Output Unit with Power Relay) has 8 actual outputs but, as a MULTIPLE I/O TERMINAL, the number of outputs allocated to the Master Unit is 16.

**Calculation Example**

When one GT1-DA04MX Analog Output Unit and three GT1-AD08 Analog Input Units are used, the total number of input points and output points is calculated as follows:

Total Number of Input Points:
Communications Unit (Status) + Analog Input Units x 3
= 32 points + 128 points x 3 = 416 points

Total Number of Output Points:
Analog Output Units x 1
= 64 points

**Reference**

For information on dealing with other problems concerning the MULTIPLE I/O TERMINAL, refer to *SECTION 7 Troubleshooting and Maintenance*. For information on problems concerning the DeviceNet, refer to *DeviceNet Operation Manual (W267)*.

## 1-2-4 I/O Unit Interface Status

The following I/O Unit interface status is maintained in the CPU Unit.

- I/O Unit connection information (I/O Unit interface status)
- Registered I/O Unit addresses

- Error I/O Unit addresses

As shown in the following diagram, the status consists of two words. The first two words of the Communications Unit allocation input area in the CPU Unit are allocated for this status. Include a program section in the CPU Unit to check this status and perform error processing.

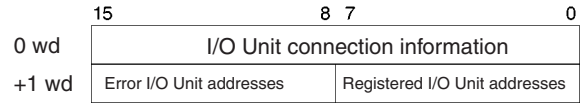


### I/O Unit Connection Information

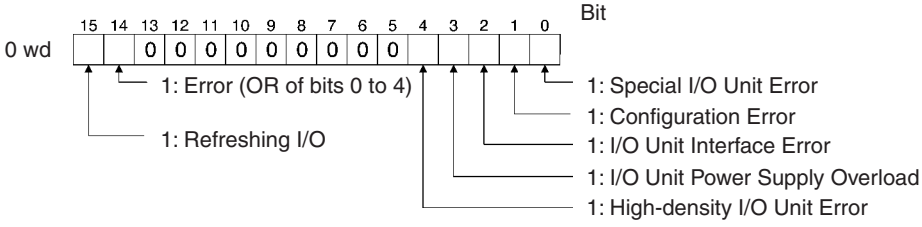


| Bit | Flag name | Meaning | Content |
|---|---|---|---|
| 15 | Refreshing I/O | Refreshing I/O | 1: Communications between the Communications Unit and I/O Units is normal.<br>0: Communications error (no response is received from an I/O Unit) |
| 14 | Error | OR of bits 0 to 4 | 1: Any one of bits 0 to 4 is ON<br>0: Bits 0 to 4 are all OFF |
| 4 | High-density I/O Unit Error | A high-density I/O Unit error was detected. | 1: Unit error<br>0: Unit normal |
| 3 | I/O Unit Power Supply Overload | An overcurrent to an I/O Unit was detected. | 1: Overcurrent detected<br>0: Normal |
| 2 | I/O Unit Interface Error | An I/O Unit interface error was detected.<br>Data Transfer Error:<br>In the I/O Unit interface, there was no response to a command after the fixed time has elapsed. Alternatively, the response expected to be returned from the end I/O Unit (terminator) was not received.<br>Too many I/O Units:<br>Nine or more I/O Units are connected. | 1: I/O Unit interface error<br>0: Normal |
| 1 | Configuration Error | The I/O configuration was changed when the Communications Unit was started. | 1: I/O configuration change during startup<br>0: No I/O configuration change during startup |
| 0 | Special I/O Unit Error | An error occurred in a Special I/O Unit. | 1: Special I/O Unit error<br>0: Special I/O Unit normal |

**Abnormal I/O Unit Addresses and Registered I/O Unit Addresses**

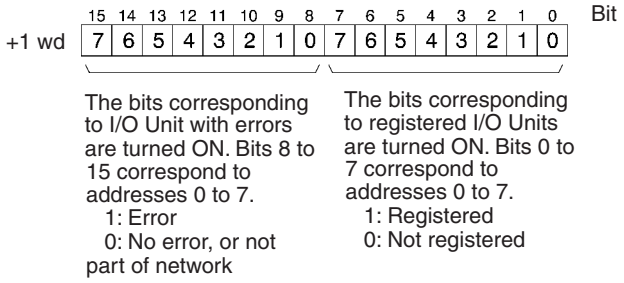


## 1-2-5 I/O Configuration Changes

The I/O Unit interface automatically recognizes the I/O Unit configuration each time the Communications Unit is started up, and stores this as the normal configuration.

**Note**

1. If the I/O Unit configuration is changed while the Communications Unit is turned ON, a configuration error will occur. Do not change the I/O Unit configuration while power is being supplied to the Communications Unit.
2. If a configuration error occurs on the I/O Unit interface, I/O refreshing of all I/O Units will stop. Even if a configuration error occurs, communications with the DeviceNet Network will continue, using the initial I/O Unit configuration. An error processing program section must therefore be included in the CPU Unit to regularly check whether or not a configuration error has occurred (status bit 1) and to process abnormal I/O Unit addresses.

If the I/O Unit configuration is changed, perform the following operations, according to the DeviceNet area allocation method. For details about I/O allocation, refer to *DeviceNet Operation Manual (W267)*.

**Default Allocations**

Because the allocation size of the Communications Unit changes together with changes to the I/O Unit configuration, a verification error will occur on DeviceNet if the scan list is enabled, as follows:

- Master Unit 7-segment display will show d6, Slave I/O size mismatch.
- Master status bits 14 and 7 will turn ON.

Perform the following operations, according to the status of the input/output areas.

**Allocation Areas Do Not Overlap with Other Slaves**

Remote I/O communications will be performed unchanged with the new configuration. Check the Verification Error Bit and, if required, perform processing to disable the allocated words in the CPU Unit. Also check the number of points for the changed I/O Unit and its allocation area on the I/O Unit interface, and re-register the scan list (first set the Scan List Enable software switch to OFF, and then set it to ON after checking the I/O size).

**Allocation Areas Overlap with Other Slaves**

In this case, I/O area duplication will also occur on the DeviceNet, as follows:

- Master Unit 7-segment display will show d0, I/O area duplication.
- Master status bits 14 and 4 will turn ON.

Check the Verification Error Bit, and perform processing to disable the allocated words in the CPU Unit. Also change the Slave node number so that the allocation area does not overlap with any other, and re-register the scan list (first set the Scan List Enable software switch to OFF, and then set it to ON after checking the I/O size).

**Note** If the scan list is disabled, there will be no changes made in the DeviceNet Master Unit, even if the Communications Unit input/output sizes change. Be sure to use the Scan List Enable Mode for normal operations.

**User-set Allocations**

The sizes of the allocated areas for the Communications Unit will change with changes to the I/O Unit configuration, causing a Verification Error to occur on DeviceNet if the scan list is enabled, as follows:

- Master Unit 7-segment display will show d6, a Slave I/O size mismatch.
- Master status bits 14 and 7 will turn ON.

Perform the following operations, according to the status of the input/output areas.

**Allocation Areas Do Not Overlap with Other Slaves**

Remote I/O communications will be performed unchanged with the new configuration data. Check the Verification Error Bit and, if required, perform processing to disable the allocated words in the CPU Unit. Also, perform change the allocations using the Configurator.

**Allocation Areas Overlap with Other Slaves**

In this case, I/O area duplication will also occur on the DeviceNet, as follows:

- Master Unit 7-segment display will show d0, I/O area duplication.
- Master status bits 14 and 4 will turn ON.

Check the Verification Error Bit, and perform processing to disable the allocated words in the CPU Unit. Also, perform change allocations using the Configurator.

# SECTION 2
# Hardware Setup and Operational Check

This section provides the basic procedure for operation and includes an actual example.


2-1 Basic Procedure . . . . . 20
2-2 Specific Example . . . . . 21

# 2-1 Basic Procedure

The basic operating procedure is shown below. For details about settings and connections, refer to *DeviceNet Operation Manual (W267)*. For explanations about Slave Units, refer to *SECTION 4 Basic I/O Unit Specifications* and *SECTION 5 Special I/O Unit Specifications*.

1 **Determine the MULTIPLE I/O TERMINAL I/O specifications.**

| | |
|---|---|
| Inputs: | Number of points/input type/connection type |
| Outputs: | Number of points/input type/connection type |
| Analog inputs: | Number of points |
| Analog outputs: | Number of points |
| Temperature inputs: | Number of points |
| Pulse inputs (counter): | Number of points |

2 **Select the I/O Units.**

| Communications Unit (1) | + | Transistor Input | | | + | Transistor Output | | | Relay Output | | + | Analog | Analog | Counter |
|---|---|---|---|---|---|---|---|---|---|---|---|---|---|---|
| | | Terminal block | Connector | High-density connector | | Terminal block | Connector | High-density connector | Terminal block | | | Input | Output | Input |
| | | 16 points | 16 points | 32 points | | 16 points | 16 points | 32 points | 16 points | 8 points | | 8 points | 4 points | 1 points |
| | | Unit | Unit | Unit | | Unit | Unit | Unit | Unit | Unit | | Unit | Unit | Unit |

3 **Check the specifications.**

The combined total of input points and output points for each Communications Unit is 1,024 max.

The total current supplied from the Communications Unit to each I/O Unit (I/O Unit interface current consumption) is 0.4 A max.

4 **Mount and connect the Communications Unit and I/O Units.**

Mount Units on DIN track (DIN 35-mm track: all Units).

Connect I/O Unit Connecting Cabled and end connector.

Connect Communications Unit internal power supply (24 VDC –15%/+10%).

Connect I/O power supply (24 VDC –15%/+10%) for each Transistor Input/Output Unit and Relay Output Unit.

Connect I/O power supply (24 VDC –15%/+10%) for each Analog Input/Output Unit and Temperature Input Unit, as well as power supply for each Counter Unit encoder, using a separate power supply from the above.

Connect I/O to each I/O Unit.

5 **Set the DIP switches for the Communications Unit, Analog Input Units, Analog Output Units, and Temperature Input Units.**

Set the node number of the Communications Unit as a DeviceNet Slave, and the hold/clear output settings for the baud rate and communications errors.

Set the Analog Input Unit, Analog Output Unit, and Temperature Input Unit ranges and other specifications. (When setting the Analog Input Unit, Analog Output Unit, and Temperature Input Unit ranges from the Configurator, set the DIP switch to Software Setting Enable.)

6 **Connect to the DeviceNet Master Unit.**

Connect the Communications Unit to the DeviceNet Master Unit using the DeviceNet Communications Cable.

7 **Turn ON the power.**

Turn ON the PLC power supply.

Turn ON the DeviceNet communications power supply.

Turn ON the Communications Unit internal power supply.

Turn ON the I/O power supply to individual I/O Units.

8 **Set using the Configurator.**

Set as required for the Communications Unit, Analog Input Units, Analog Output Units, and Temperature Input Units using the DeviceNet Configurator (versions 1.11 and later).

9 **Set the Scan List Enable switch.**

Set to enable the DeviceNet Master Unit scan list (from a PLC Peripheral Device or the Configurator).

10 **Check the operation.**

Check the I/O Unit interface status.

Check the indicators on all Units.
The following indications are normal:

| | |
|---|---|
| Communications Unit MS indicator: | Lit green |
| Communications Unit NS indicator: | Lit green |
| TS indicators for I/O Units: | Lit green |

Check that the data for the I/O words allocated in the I/O memory (with default allocations, in the DeviceNet area) of the CPU Unit of the PLC is being correctly read and written by the CPU Unit.

# 2-2 Specific Example

***1,2,3...***

1. Determine the MULTIPLE I/O TERMINAL I/O specifications.
   Each Communications Unit for the MULTIPLE I/O TERMINAL can be connected to a combined total of 1,024 input and output points (64 words) max. (This figure does not include the 2 words of the input area allocated to the I/O Unit interface status.)
   In this example, the following configuration will be used:
   - Inputs: 16 points
   - Outputs: 16 points
   - Analog Input: 8 inputs (8 words)
   - Analog Output: 4 outputs(4 words)
2. Select the I/O Units.
   - DRT1-COM Communications Unit: 1 Unit
   - GT1-ID16 Transistor Input Unit, 16 points with terminal block: 1 Unit
   - GT1-OD16MX Transistor Output Unit, 16 points with connector: 1 Unit
   - GT1-AD08MX Analog Input Unit, 8 inputs: 1 Unit
   - GT1-DA04MX Analog Output Unit: 4 outputs: 1 Unit
3. Check the specifications.
   - Check that the total number of input and output points (words) is less than 1,024 (64). In this example, the number of points is calculated as follows:
     Inputs (16 points) + Outputs (16 points) + Analog Input (8 words x 16 points) + Analog Output (4 words x 16 points)
     = 224 points

   Note There are DeviceNet Master Units that have restrictions on the number of input and output points per Slave Unit. Make sure that the number of input and output points does not exceed the limit for the Master Unit. (For example, the C200HW-DRM21-V1 has an upper limit of 512 for both input and output points.) The maximum number of input and output points for the Master Unit, includes the 2 words allocated to the I/O Unit interface status. When calculating the total number of input and output points, be sure to include this (32 points) in the calculation.

   - Check that the total I/O Unit interface current consumption is less than 0.4 A. In this example, the total is calculated as follows:
     Transistor Input Unit (35 mA) + Transistor Output Unit (35 mA) + Analog Input Unit (50 mA) + Analog Output Unit (50mA)
     =170 mA
4. Mount and connect the Communications Unit and I/O Units.
   - **Mounting on the DIN Track**

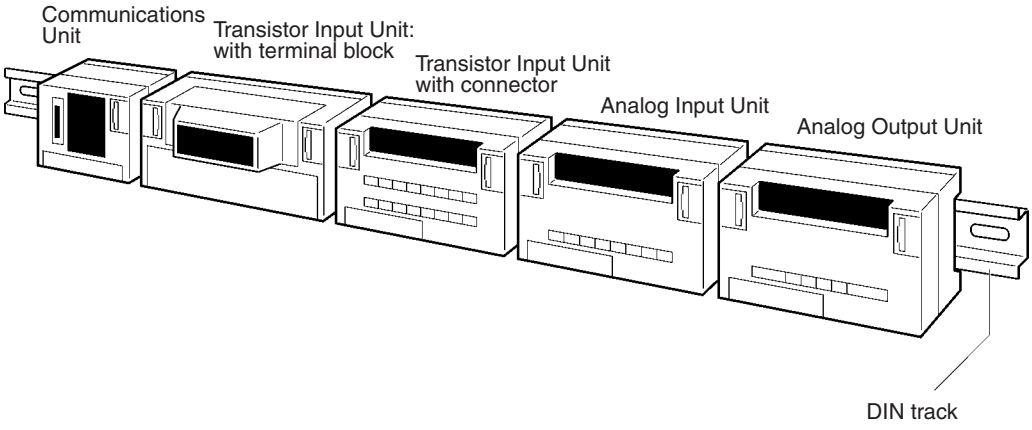

**• Connecting I/O Unit Connecting Cable**

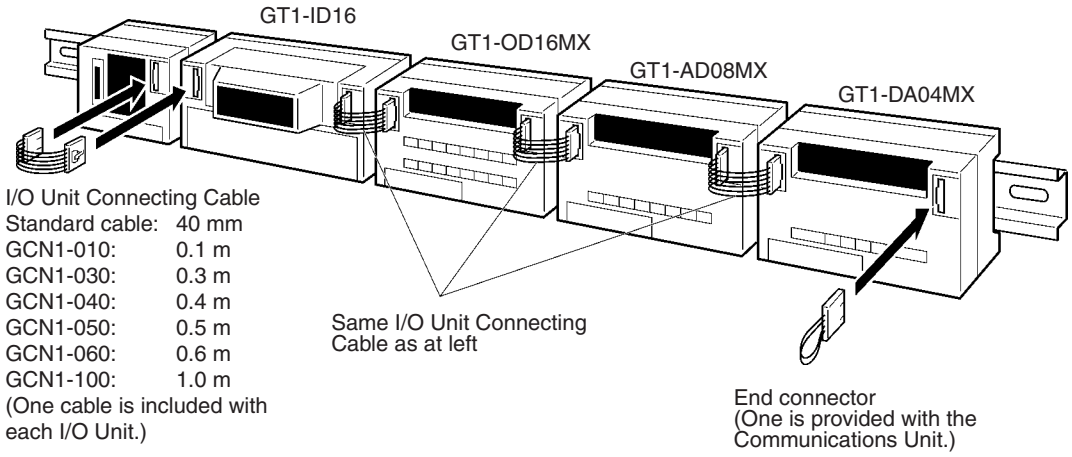


To connect each pair of Units, connect I/O Unit interface communications connector 2 on the Unit closer to the Communications Unit to I/O Unit interface communications connector 1 on the Unit closer to the end Unit.

Note The connecting cable for the I/O Unit is shown below.

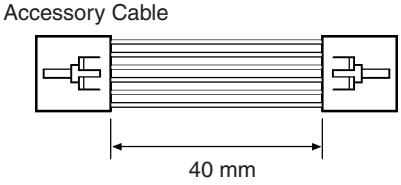


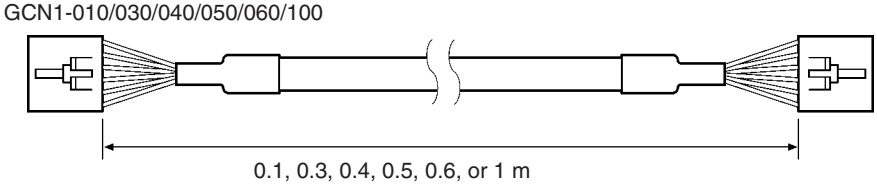


**• Connecting Communications Unit and I/O Unit Power**

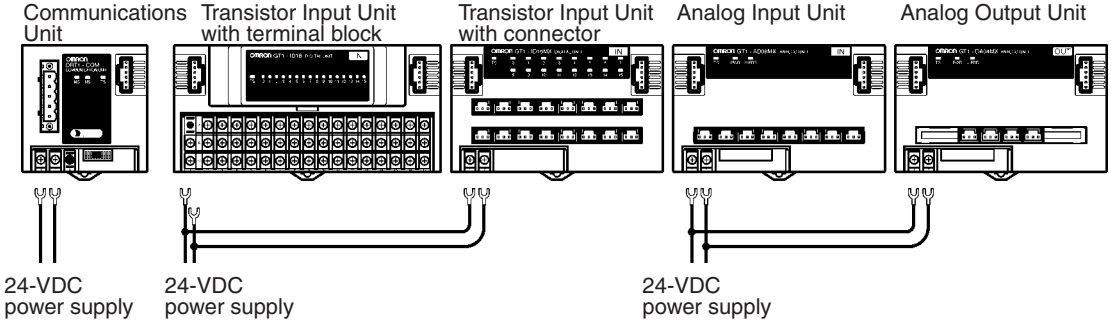


Note Be sure to separate the communications power supply, the internal power supply for the Communications Unit and the CPU Bus Unit, and the power supplies for the I/O Units. If the same power supply is used, malfunction due to noise may occur.

The capacity required for the Communications Unit internal power supply, can be obtained using the following formula:
Communications Unit internal power supply current
= Communications Unit internal current consumption + Sum of I/O Unit Interface current consumption

Note The above formula applies when a voltage of 24 VDC is supplied to the Communications Unit internal power supply terminals. If the supplied voltage becomes lower, the current consumption will increase. Select a device for the power supply that will allow a degree of variation.
When selecting a power supply, take inrush current into consideration.
The following OMRON products are recommended for the 24-VDC power supply:

| | |
|---|---|
| S82K-05024: | 100 to 120/200 to 240 VAC, 50 W |
| S82K-10024: | 100 to 120/200 to 240 VAC, 100 W |
| S82J-5524: | 100 to 120 VAC, 50 W |
| S82J-5024: | 100 to 120 VAC, 100 W |

For details of the I/O Unit interface current consumption for the Units, refer to page 9, *I/O Interface Current Consumption*.

Select power supplies for the I/O Units that are suitable for the load currents to be used and the Units' internal drive currents (refer to page 41).

- **Connecting I/O Units to I/O**

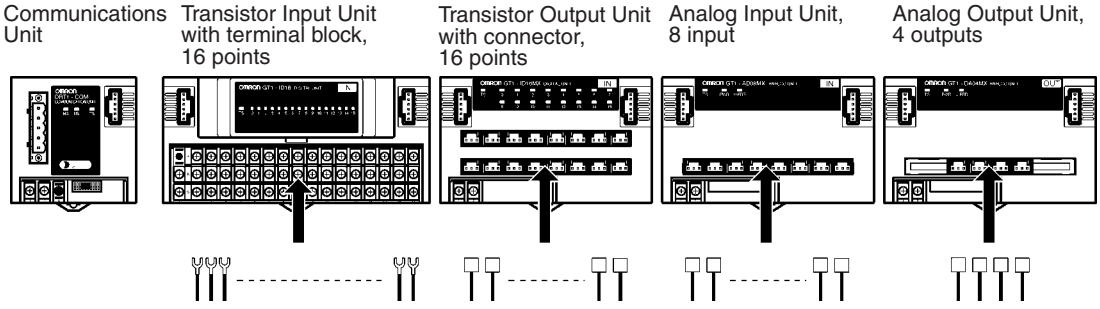


5. Set the DIP switches for the Communications Unit, Analog Input Unit, and Analog Output Unit.

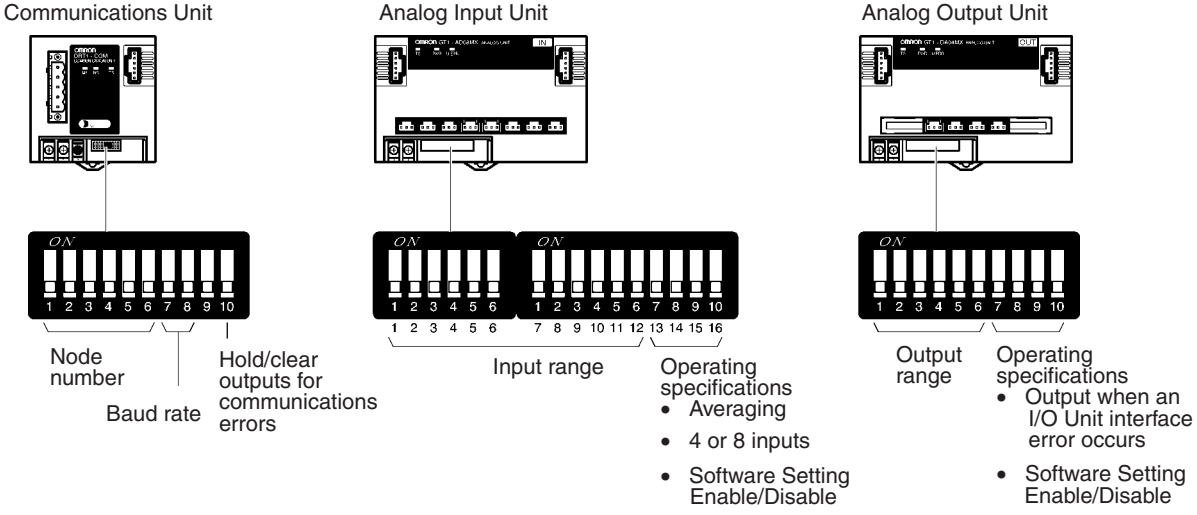


Note a) If a DeviceNet Configurator (versions 1.11 and later) is used, the input range for Analog Input Units, the output range for Analog Output Units, and I/O Unit interface error output (high-clear output/low-clear output) can be set via the network. When setting from the Configurator, use the DIP switch to set the Software Setting Enable/Disable setting to Enable. For details, refer to *5-1 Analog Input Units* and *5-2 Analog Output Units*.

b) You must also use the DIP switch and the Configurator to set the Temperature Input Unit. For details, refer to *5-3 GT1-TS04T and GT1-TS04P Temperature Input Units*.

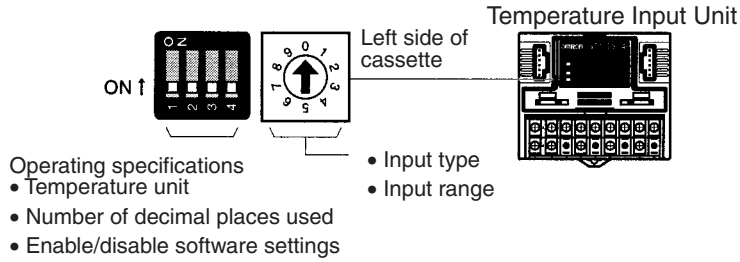


6. Connect to the DeviceNet Master Unit.

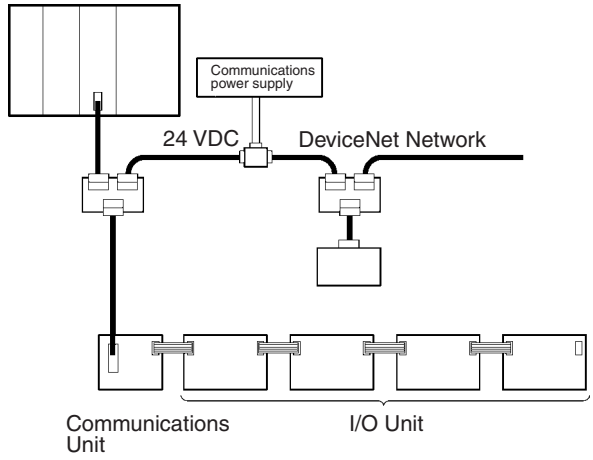


7. Turn ON the power.
8. Set using the Configurator.

   Using version 1.11 or later versions of the DeviceNet Configurator, it is possible, via the network, to set the following:

   - Input range for Analog Input Units.
   - Output range for Analog Output Units.
   - I/O Unit interface error output (low-clear output/high-clear output) for Analog Output Units.

   Note a) When using a DIP switch, the input and output ranges for the Analog Input and Output Units can be set in 2-point units, whereas with a Configurator, a setting can be made for each point.

   b) You can set the Temperature Input Unit input range as well as the I/O Unit settings using the Configurator. For details, refer to *5-3-2 Settings Using the Configurator*.

9. Create the scan list.

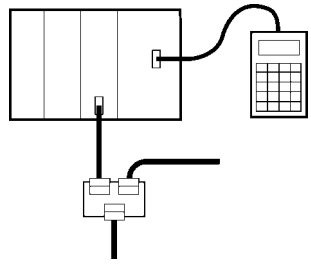

Set the Scan List Enable switch (PLC software switch) to ON. For example, for a DeviceNet Master Unit with unit address 0 installed in a C200HX/HG/

HE(-Z) PLC, turn ON IR 10000. For details of the DeviceNet startup procedure, refer to the *DeviceNet Operation Manual (W267)*.

10. Check the operation.

- **Checking Indicators**

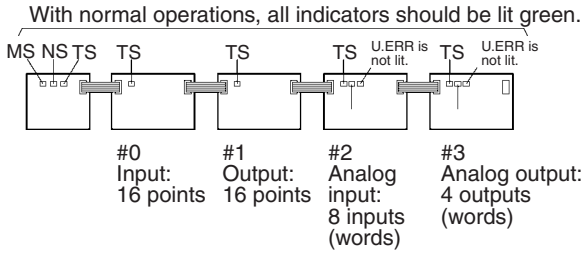


- **Checking the I/O Unit Interface Status**

**Example:**
The following allocations will be used for status when the default allocations are used for a Communications Unit with node number 01 connected to a C200HX/HG/HE(-Z) DeviceNet Master Unit with unit address 0.

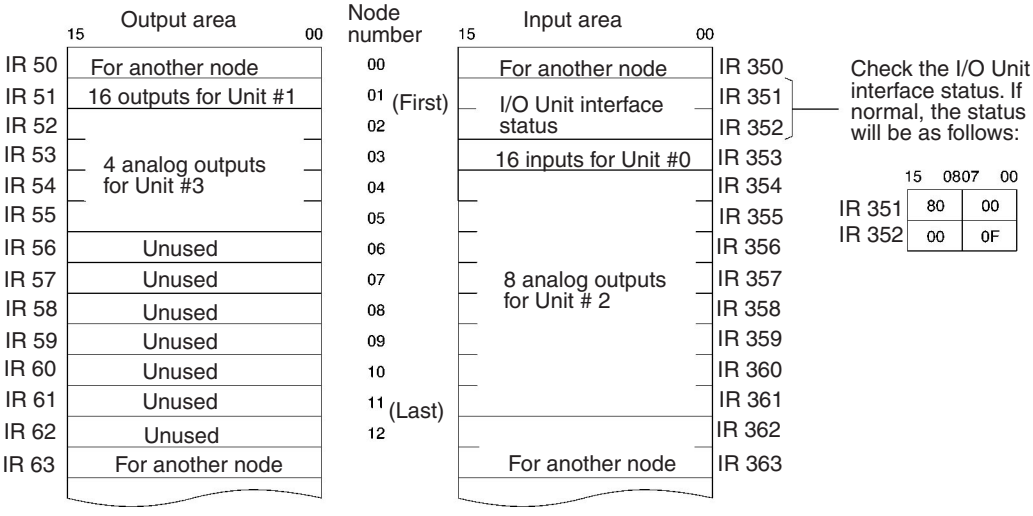


- The first two words of the input area is automatically allocated for the I/O Unit interface status information. This allocation cannot be changed.
- Words are allocated for the input/output data for each I/O Unit in the order that the I/O Units are connected (I/O Unit interface addresses 0 to 3) in the input area (input) and the output area (output).
- The input/output areas are allocated in the words corresponding to node numbers 01 to 11.

# SECTION 3
# Sample Programs

This section provides some examples of programs used with the Counter Unit.


3-1 Examples of Counter Unit Operation . . . . . 28
3-1-1 Counter Unit Word Allocation for Functions . . . . . 28
3-1-2 Present Count Value Reading . . . . . 31
3-1-3 Counter Setting and Execution . . . . . 31
3-1-4 Count Restart Operation after Error Clearance . . . . . 33

# 3-1 Examples of Counter Unit Operation

This section, using the system configuration shown below as an example, explains how to use the Counter Unit.

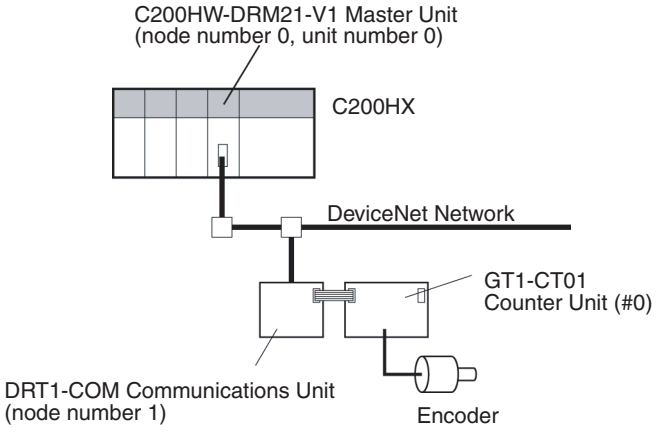


## 3-1-1 Counter Unit Word Allocation for Functions

Setting and control for the Counter Unit is executed by writing to the allocated area in the output area of the Master, and status check and monitoring is executed by reading the allocated area in the input area of the Master. The allocated area for the Counter Unit, with the system configuration shown above, is given below (this example is for fixed allocation). For details about area allocation for a MULTIPLE I/O TERMINAL (Communications Unit) on a DeviceNet Master, refer to the *DeviceNet Operation Manual (W267)*. For details about area allocation for a Counter Unit in the area used by a MULTIPLE I/O TERMINAL, refer to *1-2-3 Allocating I/O*.

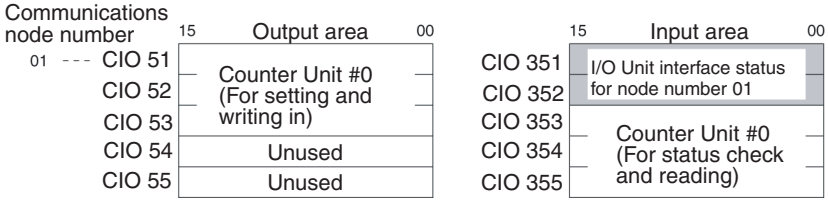


Functions are allocated to the words as shown below. This is only a basic list. For details, refer to *5-4 GT1-CT01 Counter Unit*.

### Output Area

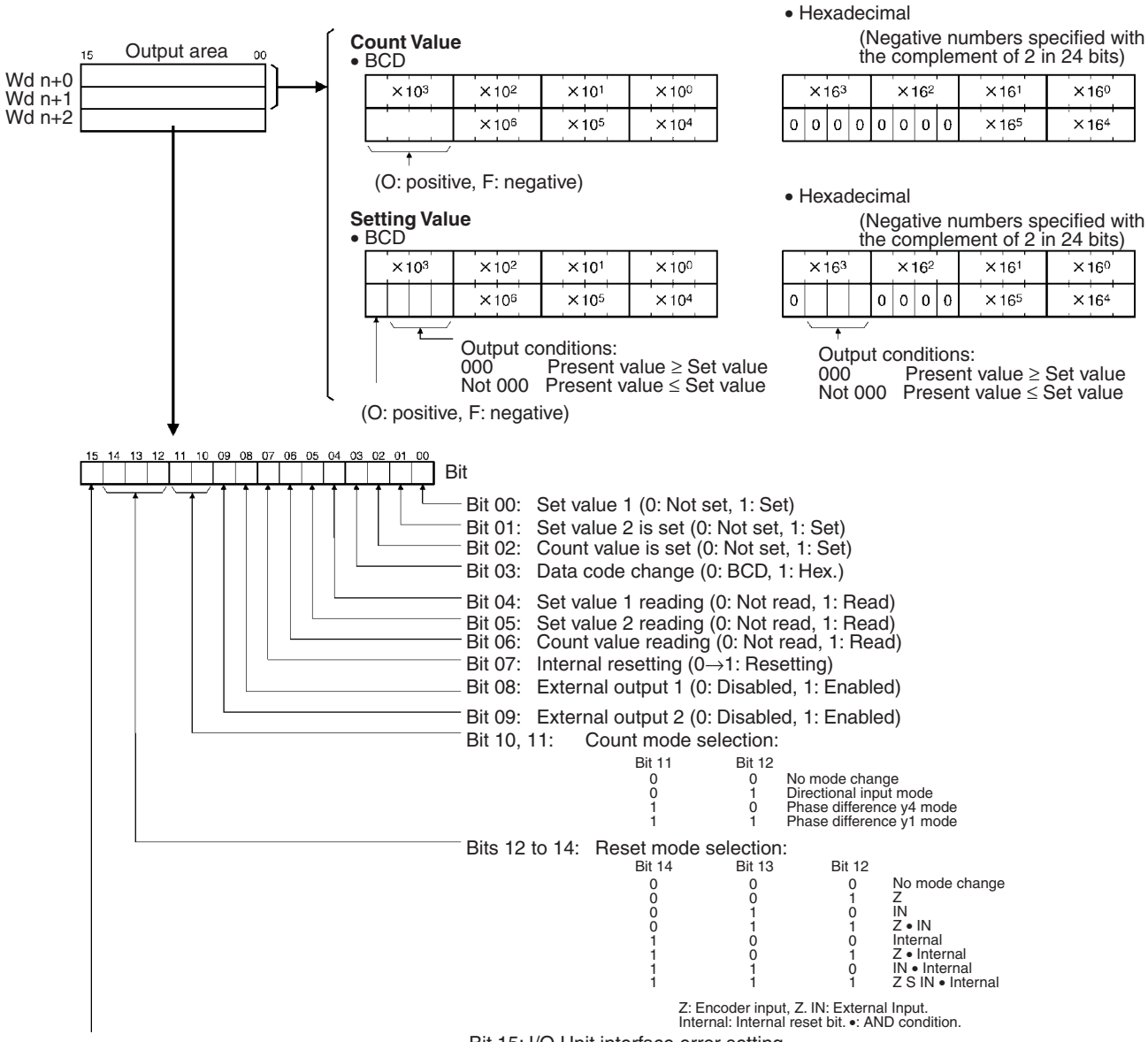
15
Output area
00
Wd n+0
Wd n+1
Wd n+2
Count Value
• BCD
×10³ ×10² ×10¹ ×10⁰
×10⁶ ×10⁵ ×10⁴
(O: positive, F: negative)
• Hexadecimal
(Negative numbers specified with the complement of 2 in 24 bits)
×16³ ×16² ×16¹ ×16⁰
0 0 0 0 0 0 0 0 ×16⁵ ×16⁴
Setting Value
• BCD
×10³ ×10² ×10¹ ×10⁰
×10⁶ ×10⁵ ×10⁴
Output conditions:
000 Present value ≥ Set value
Not 000 Present value ≤ Set value
(O: positive, F: negative)
• Hexadecimal
(Negative numbers specified with the complement of 2 in 24 bits)
×16³ ×16² ×16¹ ×16⁰
0 0 0 0 0 ×16⁵ ×16⁴
Output conditions:
000 Present value ≥ Set value
Not 000 Present value ≤ Set value
15 14 13 12 11 10 09 08 07 06 05 04 03 02 01 00
Bit
Bit 00: Set value 1 (0: Not set, 1: Set)
Bit 01: Set value 2 is set (0: Not set, 1: Set)
Bit 02: Count value is set (0: Not set, 1: Set)
Bit 03: Data code change (0: BCD, 1: Hex.)
Bit 04: Set value 1 reading (0: Not read, 1: Read)
Bit 05: Set value 2 reading (0: Not read, 1: Read)
Bit 06: Count value reading (0: Not read, 1: Read)
Bit 07: Internal resetting (0→1: Resetting)
Bit 08: External output 1 (0: Disabled, 1: Enabled)
Bit 09: External output 2 (0: Disabled, 1: Enabled)
Bit 10, 11: Count mode selection:
Bit 11 Bit 12
0 0 No mode change
0 1 Directional input mode
1 0 Phase difference y4 mode
1 1 Phase difference y1 mode
Bits 12 to 14: Reset mode selection:
Bit 14 Bit 13 Bit 12
0 0 0 No mode change
0 0 1 Z
0 1 0 IN
0 1 1 Z • IN
1 0 0 Internal
1 0 1 Z • Internal
1 1 0 IN • Internal
1 1 1 Z S IN • Internal
Z: Encoder input, Z. IN: External Input.
Internal: Internal reset bit. •: AND condition.
Bit 15: I/O Unit interface error setting
(0: Count stop • Initialize, 1: Count continue)

### Input Area

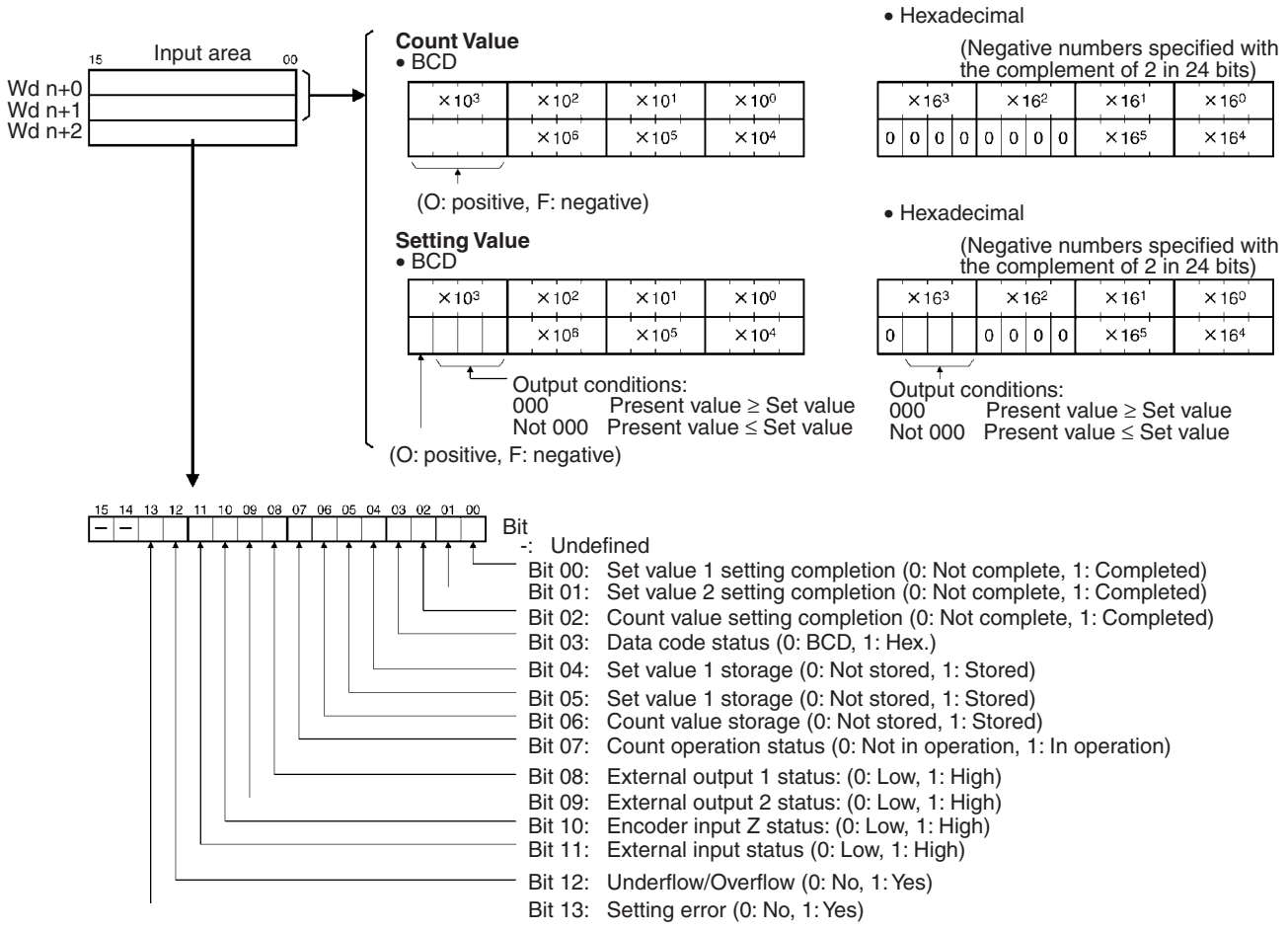
Input area
15
00
Wd n+0
Wd n+1
Wd n+2
Count Value
• BCD
×10³ ×10² ×10¹ ×10⁰
×10⁶ ×10⁵ ×10⁴
(O: positive, F: negative)
• Hexadecimal
(Negative numbers specified with the complement of 2 in 24 bits)
×16³ ×16² ×16¹ ×16⁰
0 0 0 0 0 0 0 0 ×16⁵ ×16⁴
Setting Value
• BCD
×10³ ×10² ×10¹ ×10⁰
×10⁶ ×10⁵ ×10⁴
Output conditions:
000 Present value ≥ Set value
Not 000 Present value ≤ Set value
(O: positive, F: negative)
• Hexadecimal
(Negative numbers specified with the complement of 2 in 24 bits)
×16³ ×16² ×16¹ ×16⁰
0 0 0 0 0 ×16⁵ ×16⁴
Output conditions:
000 Present value ≥ Set value
Not 000 Present value ≤ Set value
15 14 13 12 11 10 09 08 07 06 05 04 03 02 01 00
Bit
-: Undefined
Bit 00: Set value 1 setting completion (0: Not complete, 1: Completed)
Bit 01: Set value 2 setting completion (0: Not complete, 1: Completed)
Bit 02: Count value setting completion (0: Not complete, 1: Completed)
Bit 03: Data code status (0: BCD, 1: Hex.)
Bit 04: Set value 1 storage (0: Not stored, 1: Stored)
Bit 05: Set value 1 storage (0: Not stored, 1: Stored)
Bit 06: Count value storage (0: Not stored, 1: Stored)
Bit 07: Count operation status (0: Not in operation, 1: In operation)
Bit 08: External output 1 status: (0: Low, 1: High)
Bit 09: External output 2 status: (0: Low, 1: High)
Bit 10: Encoder input Z status: (0: Low, 1: High)
Bit 11: External input status (0: Low, 1: High)
Bit 12: Underflow/Overflow (0: No, 1: Yes)
Bit 13: Setting error (0: No, 1: Yes)

## 3-1-2 Present Count Value Reading

If the following bits in the output area for the Counter Unit have been set to ON, the set values or the present count value (count value) will always be read to words m and m+1 in the input area.

To read set value 1: Output area word n+2, bit 04
To read set value 2: Output area word n+2, bit 05
To read count value: Output area word n+2, bit 06

The simplest example of a program to commence count operation and obtain the count value is given in the following. For details refer to *5-4 GT1-CT01 Counter Unit*.

**Note**

1. To execute counting, it is necessary to set the count mode. If the count mode is changed during count operation, however, the count value will be cleared to 0.
2. Setting and reading will not be executed if a bit with a higher priority is ON. As shown in the following example, therefore, it is recommended that word n+2 be used with the MOV instruction.

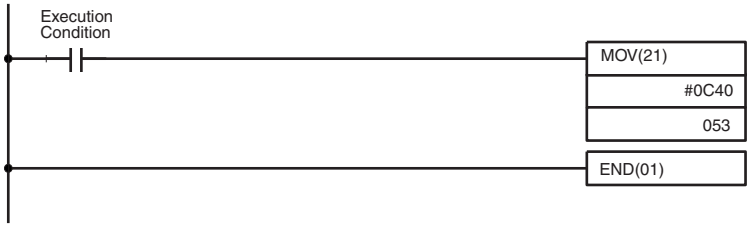


When execution of count value reading is indicated (execution conditions are ON), set the following conditions:
- Word 53
  Bit 03: Data code BCD
  Bit 06: Count value reading
  Bits 10, 11: Count mode phase difference ×1

The count value will subsequently be sent to words m and m+1 (353, 354) of the Counter Unit automatically.

## 3-1-3 Counter Setting and Execution

When the program is executed, the necessary settings for the Counter Unit will be made, and count operation will start. During count operation, external outputs 1 and 2 of the Counter Unit will automatically switch ON or OFF, according to the count value.

Note It will be necessary to reset all the settings, including the set values, present value and count mode, every time the Counter Unit is turned ON.

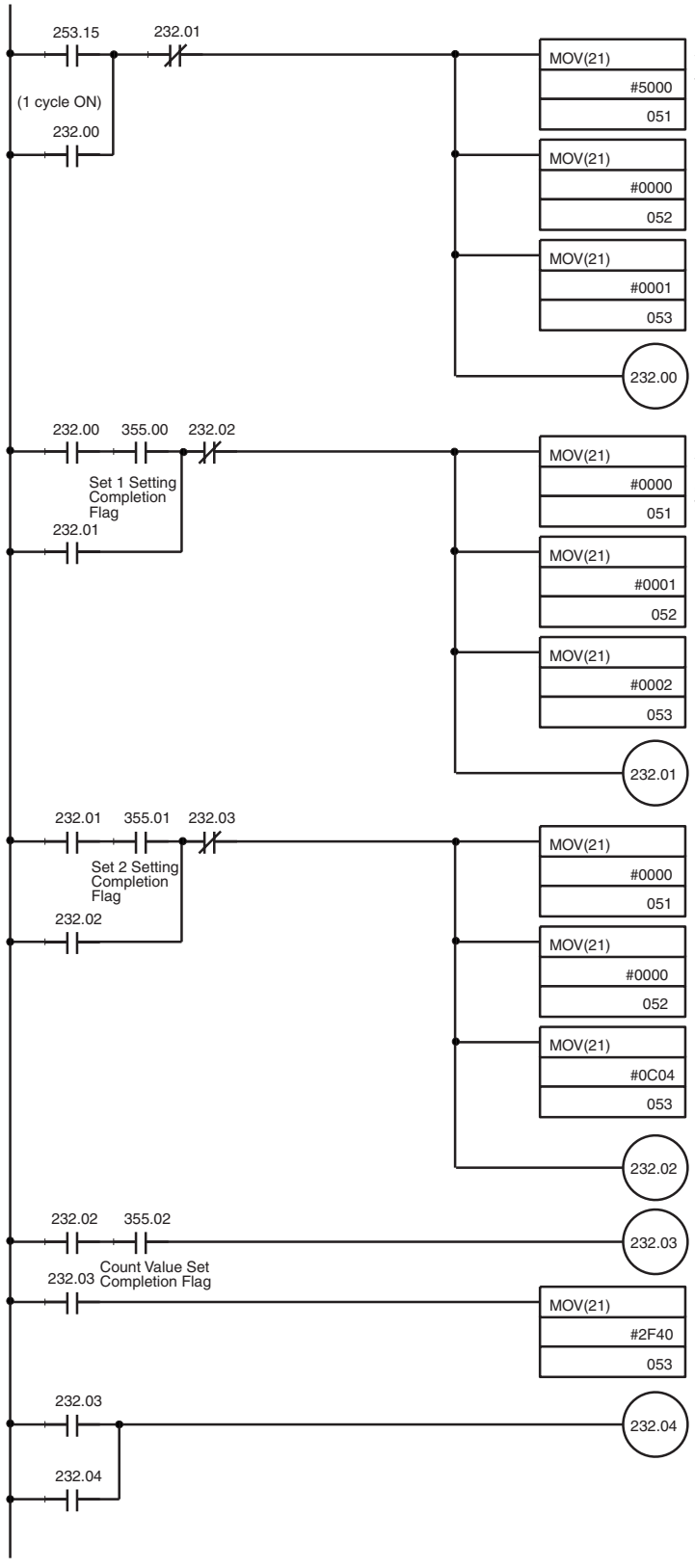


When the program starts, set value 1 will be set under the following conditions:

- Words 51, 52
  Set value 1: +5000 (BCD)
  Output conditions: Present value . Set value 1
- Word 53
  Bit 00: Setting value 1 set
  Bit 03: Data code BCD

Bit 232.00 is a Step Advance Flag.

When the Step Advance Flag 232.00 turns ON and set value 1 has been set, set value 2 will be set under the following conditions:

- Words 51, 52
  Set value 2: +10000 (BCD)
  Output conditions: Present value . Set value 2
  Bit 01: Set value 2 set
  Bit 03: Data code BCD

Bit 232.01 is a Step Advance Flag.

When the Step Advance Flag 232.01 turns ON and set value 2 has been set, the count value will be set under the following conditions:

- Words 51, 52
  Count value: 0 (BCD)
- Word 53
  Bit 02: Count value set
  Bit 03: Data code BCD
  Bit 10, 11: Differential phase pulse input ×1

Bit 232.02 is a Step Advance Flag.

When the Step Advance Flag 232.02 is ON and the count value has been set, the Step Advance Flag 232.03 turns ON.

When the Step Advance Flag 232.03 turns ON, the initial settings are complete. Commence count operation under the following conditions:

- Word 53
  Bit 03: Data code BCD
  Bit 06: Count value read
  Bit 08: External output 1 enabled
  Bit 09: External output 2 enabled
  Bit 10, 11: Count mode phase difference ×1
  Bits 12 to 14: External input, reset mode
  Bit 15: Count stop during I/O Unit Interface error

When the settings and operations for the counter have been completed, the Step Advance Flag 232.04 turns ON.

## 3-1-4 Count Restart Operation after Error Clearance

If power supply from the I/O Unit interface to the Counter Unit is interrupted, the Counter Unit will stop count operation. It will be necessary to restart the count operation. When the Counter Unit is restarted, all settings, such as the setting values, the present value, and the count mode will be cleared. These settings must be reset. By adding the following program to the program described in the previous section, *3-1-3 Counter Setting and Execution*, the settings will be reset automatically when the Counter Unit is restarted, and it will be possible to resume count operations. An example of the program used, along with an explanation of that program appears below. For details about the status area of the Master Unit, refer to *DeviceNet Operation Manual (W267)*.

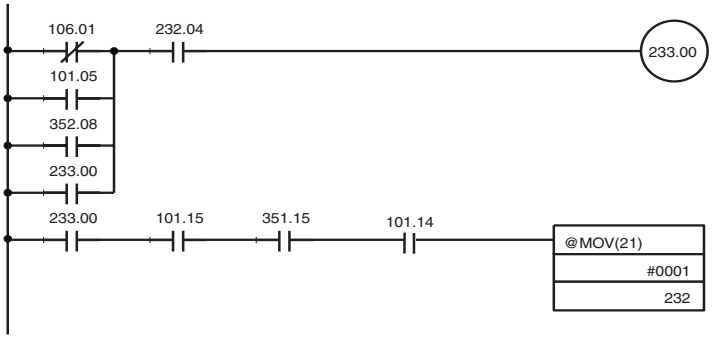


If any of the following occur after the Counter Unit setting and start-up have been completed (and 232.04 is ON), the Step Advance Bit 233.00 turns ON in order to reset the settings for the Counter Unit.

- The Communications Unit Bit (node number 01 = 106.01) for the Master Unit normal Slave information area is OFF (error).
- Bit 5 (101.05) of the Master Status Area 1 is ON (transmission error in the DeviceNet).
- The Counter Unit Bit (#0 = 352.08) for the error I/O Unit address in the I/O Unit Interface Status Area is ON (error).

When the Step Advance Flag 233.00 turns ON for resetting, if all of the following conditions are satisfied, the Counter Unit will start up normally and communications will be possible. Therefore, the Step Advance Flag 232.00 will turn ON. The previously described setting and execution program will be re-executed.

- Bit 15 (101.15) of the Master Status Area is ON (Device Net remote I/O communications are operating).
- Bit 14 (101.14) of the Master Status Area 1 is OFF (Error/Communications Stopped Flag).
- Bit 15 (351.15) of I/O Unit connection information in the I/O Unit Interface Status Area is ON (I/O refresh in progress).

# SECTION 4
# Basic I/O Unit Specifications

This section provides the basic specifications for the Basic I/O Units, including Communications Units, Transistor Input Units, Transistor Output Units, and Relay Output Units.


4-1 Communications Unit . . . . . 36
4-2 Specifications Common to All Basic I/O Units . . . . . 40
4-2-1 Precautions for Connecting a DC 2-wire Sensor . . . . . 42
4-2-2 TS Indicator . . . . . 43
4-3 Transistor Input Units . . . . . 44
4-3-1 GT1-ID16 Transistor Input Unit with Terminal Block (NPN) . . . . 44
4-3-2 GT1-ID16-1 Transistor Input Unit with Terminal Block (PNP) . . . 46
4-3-3 GT1-ID16MX Transistor Input Unit with Connector (NPN) . . . . . 48
4-3-4 GT1-ID16MX-1 Transistor Input Unit with Connector (PNP) . . . . 50
4-3-5 GT1-ID16ML Transistor Input Unit with Connector (NPN). . . . . 52
4-3-6 GT1-ID16ML-1 Transistor Input Unit with Connector (PNP) . . . . 55
4-3-7 GT1-ID16DS Transistor Input Unit with Connector (NPN) . . . . . 57
4-3-8 GT1-ID16DS-1 Transistor Input Unit with Connector (PNP). . . . . 60
4-3-9 GT1-ID32ML Transistor Input Unit with High-density Connector (NPN) . . . . . 62
4-3-10 GT1-ID32ML-1 Transistor Input Unit with High-density Connector (PNP) . . . . . 64
4-4 Transistor Output Units . . . . . 66
4-4-1 GT1-OD16 Transistor Output Unit with Terminal Block (NPN) . . 66
4-4-2 GT1-OD16-1 Transistor Output Unit with Terminal Block (PNP) . 68
4-4-3 GT1-OD16MX Transistor Output Unit with Connector (NPN) . . . 71
4-4-4 GT1-OD16MX-1 Transistor Output Unit with Connector (PNP) . . 73
4-4-5 GT1-OD16ML Transistor Output Unit with Connector (NPN) . . . 76
4-4-6 GT1-OD16ML-1 Transistor Output Unit with Connector (PNP) . . 78
4-4-7 GT1-OD16DS Transistor Output Unit with Connector (NPN) . . . . 81
4-4-8 GT1-OD16DS-1 Transistor Output Unit with Connector (PNP). . . 83
4-4-9 GT1-OD32ML Transistor Output Unit with High-density Connector (NPN) . . . . . 85
4-4-10 GT1-OD32ML-1 Transistor Output Unit with High-density Connector (PNP) . . . . . 87
4-5 Relay Output Units . . . . . 90
4-5-1 GT1-ROP08 Relay Output Unit with Power Relay . . . . . 90
4-5-2 GT1-ROS16 Relay Output Unit with Miniature Relay . . . . . 92

# 4-1 Communications Unit

The Communications Unit connects the MULTIPLE I/O TERMINAL to the DeviceNet Network. Connections for a maximum of eight I/O Units can be made with one Communications Unit.

### Specifications

| Item | | Specification |
|---|---|---|
| Model | | DRT1-COM |
| DeviceNet communications power supply | Voltage range | 11 to 25 VDC (supplied from the DeviceNet communications connector) |
| | Unit current consumption | 30 mA max. |
| Internal power supply | Voltage range | 20.4 to 26.4 VDC (24 VDC $^{+10\%}/_{-15\%}$) |
| | Unit current consumption | 110 mA max. (at 24 VDC) |
| | Maximum current | 0.6 A (with maximum output to I/O Unit)<br>The capacity required for the internal power supply of the Communications Unit can be obtained using the following formula:<br>Communications Unit internal power supply current = Communications Unit internal current consumption + total current consumption for the I/O Unit interfaces |
| | Inrush current | 30 A max. |
| I/O Unit interface | Number of Units connected | 8 Units max. |
| | Total number of inputs/outputs | Total inputs (IN) and outputs (OUT): 1,024 points max. |
| | Rated output current | 0.4 A max. |
| | Overcurrent protection function | 105% of rated current or higher. When an overcurrent occurs, the power supply to the I/O Units will remain OFF until the power supply is turned ON again. |
| Noise immunity | | ±2000 V<br>(IEC1000-4-4 via fast transient noise simulator) |
| Vibration resistance | | 10 to 150 Hz, 1.0-mm double amplitude or 70 $m/s^2$ |
| Shock resistance | | 200 $m/s^2$ |
| Dielectric strength | | 500 VAC (between isolated circuits) |
| Ambient temperature | | –10°C to 55°C |
| Ambient humidity | | 25% to 85% (with no condensation) |
| Operating atmosphere | | No corrosive gases |
| Storage temperature | | –25°C to 65°C |
| Mounting | | DIN 35-mm track |
| Weight | | Approx. 135 g |
| Safety standards | | UL508, CSA22.2 |
| EMC directives | | EN50081-2, EN50082-2 |

This product has been tested in the test laboratory of a third party authorized by ODVA and has been approved as conforming to ODVA Conformance Software Ver. 2.0-1.00.

### Components

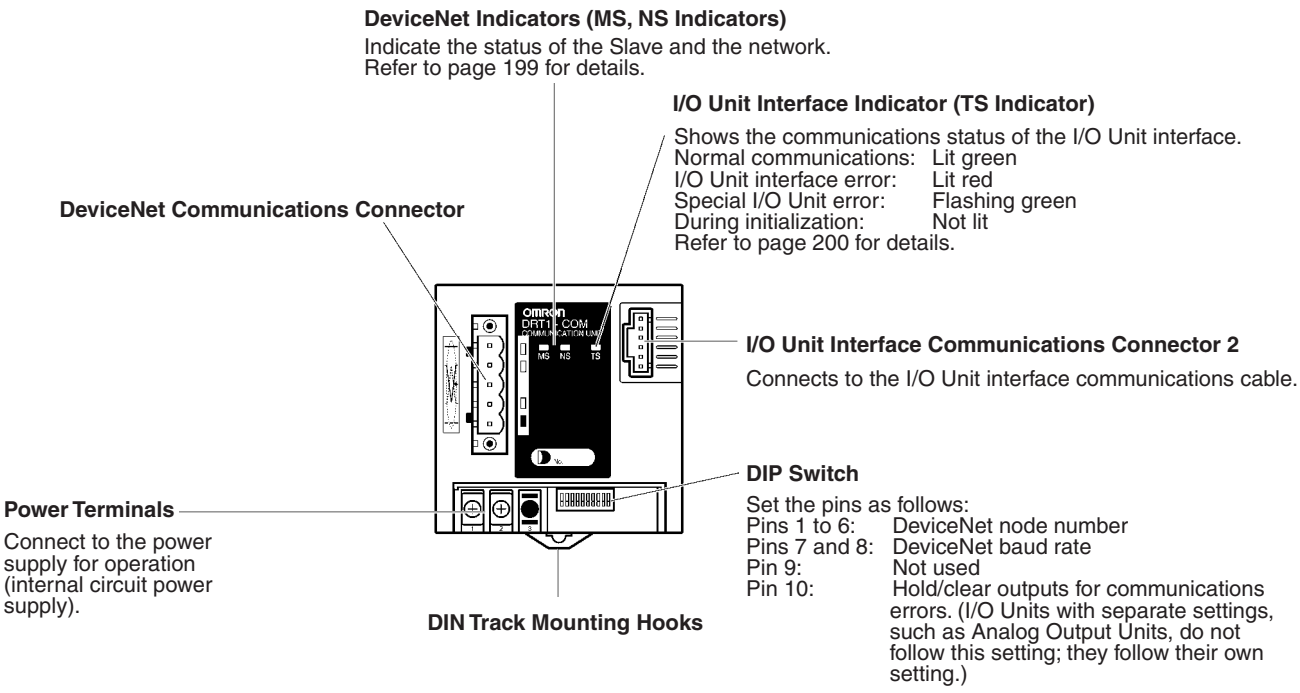


### DIP Switch Settings

The following diagram shows the functions of the DIP switch.

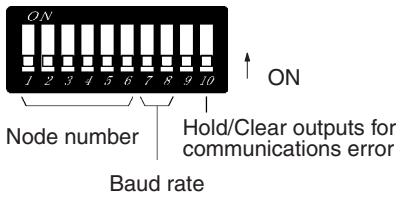


The following table summarizes the DIP switch settings. (All pins are factory-set to OFF.)

| Pin(s) | Function | Settings |
|---|---|---|
| 1 through 6 | Node number | Refer to page 38, *Node Number Settings* and *Baud Rate Settings* for details. |
| 7 and 8 | Baud rate | |
| 9 | Reserved for system use. | Always OFF. |
| 10 | Hold/Clear outputs for communications error | OFF: Clear<br>All output data will be cleared to 0 when a communications error occurs.<br>ON: Hold<br>All output data will be retained when a communications error occurs. (See note 1.) |

**Note**

1. I/O Units with individual settings, such as Analog Output Units, do not follow this setting; they follow their own setting.
2. Always turn OFF the power supplies (including the communications power supply) before changing any settings.

**Node Number Settings**

The setting range for the Communications Unit node numbers varies according to the PLC, as shown in the following table.

| Master PLC | CV Series | C200HX/HG/HE(-Z) | C200HS |
|---|---|---|---|
| Setting range (decimal) | 0 to 63 | 0 to 49 (without Configurator)<br>0 to 63 (with Configurator) | 0 to 31 (without Configurator)<br>0 to 63 (with Configurator) |

Node numbers vary according to the settings of pins 1 to 6, as shown in the following table. Node numbers can be set to any value within the range, as long as they do not coincide with other nodes (Master, Slave) or node numbers in the same network.

| Pin | | | | | | Node number |
|---|---|---|---|---|---|---|
| 6 | 5 | 4 | 3 | 2 | 1 | |
| OFF | OFF | OFF | OFF | OFF | OFF | 0 (factory-set) |
| OFF | OFF | OFF | OFF | OFF | ON | 1 |
| OFF | OFF | OFF | OFF | ON | OFF | 2 |
| .<br>.<br>. | .<br>.<br>. | .<br>.<br>. | .<br>.<br>. | .<br>.<br>. | .<br>.<br>. | .<br>.<br>. |
| ON | ON | ON | ON | OFF | ON | 61 |
| ON | ON | ON | ON | ON | OFF | 62 |
| ON | ON | ON | ON | ON | ON | 63 |

**Note**

1. For details about node numbers and I/O allocation, refer to *DeviceNet Operation Manual (W267)*.
2. If node numbers coincide with other nodes, overlapping will occur and communications will not be possible.

**Baud Rate Settings**

The baud rate can be set using pins 7 and 8, according to the following table.

| Pin | | Baud rate |
|---|---|---|
| 1 | 2 | |
| 7 | 8 | |
| OFF | OFF | 125 kbps (factory-set) |
| ON | OFF | 250 kbps |
| OFF | ON | 500 kbps |
| ON | ON | Setting not possible |

**Note**

1. Be sure to turn OFF the power supply to Slaves (including communications power supply) when making the setting.
2. Set the same baud rate for all the nodes (Master, Slaves) on the network. Not only can Slaves with a different baud rate to the Master not take part in communications, they can also cause communications errors for communications between correctly set nodes.

**Mounting**

Mount the Unit on DIN 35-mm track using the DIN Track Mounting Hook.

**I/O Unit Interface Connectors**

The I/O Unit interface connectors provide I/O Unit interface and allow power to be supplied to the I/O Units.

A feedback cable must be connected to the right-side connector on the end I/O Unit (terminator).

One I/O Unit Connecting Cable (cable length 40 mm) is included with each I/O Unit. One end connector is attached to the Communications Unit. I/O Unit

Connecting Cables with the following lengths are also available (sold separately): 0.1, 0.3, 0.4, 0.5, 0.6, and 1.0 m (GCN1-010/030/040/050/060/100).

As shown in the following diagram, connect the I/O Unit interface connector 2 on the Communication Unit to the I/O Unit interface connector 1 on the I/O Unit.

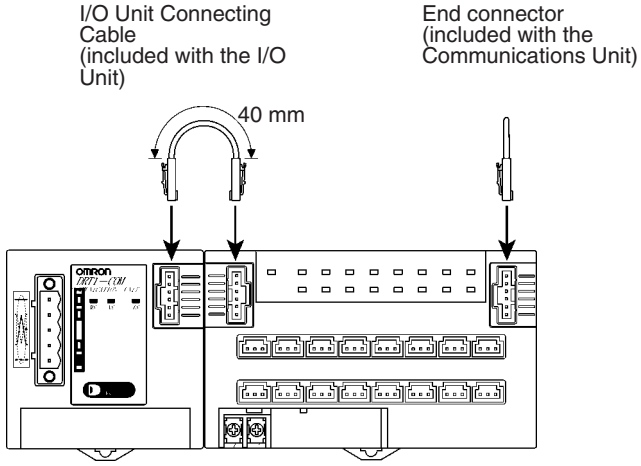


Connect the I/O Units in order, in the way shown in the above diagram. A maximum of 8 Units can be connected.

Be sure to connect the end connector to the I/O Unit interface connector 2 of the last I/O Unit.

**Wiring**

Provide the internal power supply as shown in the following diagram.

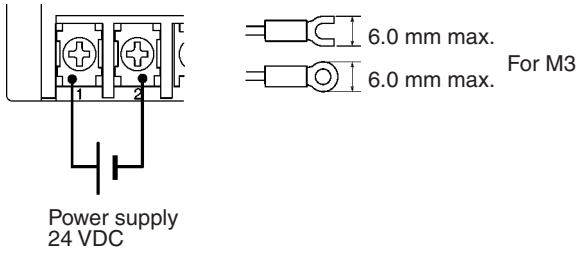


**Dimensions**

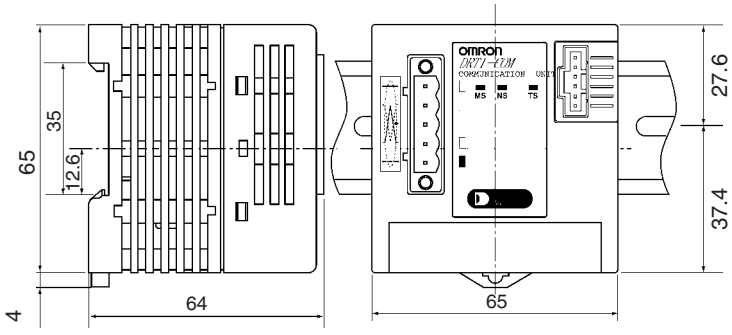


**Note** The vertical center of the Unit is 4.9 mm lower than the center of the DIN track. The Unit therefore extends downward 41.4 mm (including the mounting hook) from the DIN track center.

# 4-2 Specifications Common to All Basic I/O Units

For details of the differences between Units, refer to the explanations for the relevant Units.

**General Specifications**

| Item | | Specification |
|---|---|---|
| I/O power supply | Voltage range | 20.4 to 26.4 VDC (24 VDC $^{+10\%}/_{-15\%}$) |
| Noise immunity | | ±2000 V<br>(IEC61000-4-4 via fast transient noise simulator) |
| Vibration resistance | | Relay output unit:<br>10 to 55 Hz, 1.0-mm double amplitude or 70 m/s$^2$<br>Others:<br>10 to 150 Hz, 1.0-mm double amplitude or 70 m/s$^2$ |
| Shock resistance | | 200 m/s$^2$ |
| Dielectric strength | | 500 VAC (between isolated circuits) |
| Ambient temperature | | –10°C to 55°C |
| Ambient humidity | | 25% to 85% (with no condensation) |
| Operating atmosphere | | No corrosive gases |
| Storage temperature | | –25°C to 65°C |
| Mounting | | DIN 35-mm track |
| Safety standards | | UL508, CSA22.2 |
| EMC directives | | EN50081-2, EN50082-2 |

**Input Specifications for Transistor Input Unit**

| Item | Specification |
|---|---|
| ON voltage | 15 VDC min. (between each input terminal and V and each input terminal and G) |
| OFF voltage | 5 VDC max. (between each input terminal and V and each input terminal and G) |
| OFF current | 1 mA max. |
| Input current | Typical: 5 mA at 24 VDC, minimum 3 mA at 17 VDC. |
| Input impedance | 4.4 kΩ |
| ON delay time | 1.5 ms max. |
| OFF delay time | 1.5 ms max. |
| Insulation resistance | 20 MΩ min. at 250 VDC (between isolated circuits) |
| Isolation method | Photocoupler |

**Output Specifications for Transistor Output Unit**

| Item | Specification |
|---|---|
| Rated output current | 0.5 A/point |
| Residual voltage | 1.2 V max. at 0.5 A DC (between each output terminal and V and each output terminal and G) |
| Leakage current | 0.1 mA max. at 24 VDC (between each output terminal and V and each output terminal and G) |
| ON delay time | 0.5 ms max. |
| OFF delay time | 1.5 ms max. |
| Insulation resistance | 20 MΩ min. at 250 VDC (between isolated circuits) |
| Isolation method | Photocoupler |

Note For details about output specifications of Relay Output Units, refer to the explanations for the relevant Units.

**Current Consumption and Weight**

The following table shows the current consumption, the weight and the connector-lock strength for the I/O Units.

| Model | I/O Unit interface power supply current | I/O power supply current | Weight |
|---|---|---|---|
| GT1-ID16(-1) | 35 mA max. | --- | Approx. 330 g |
| GT1-ID16MX(-1) | 35 mA max. | --- | Approx. 175 g |
| GT1-ID16ML(-1) | 35 mA max. | --- | Approx. 120 g |
| GT1-ID16DS(-1) | 35 mA max. | --- | Approx. 125 g |
| GT1-ID32ML(-1) | 55 mA max. | --- | Approx. 195 g |
| GT1-OD16(-1) | 35 mA max. | 9 mA max. | Approx. 330 g |
| GT1-OD16MX(-1) | 35 mA max. | 9 mA max. | Approx. 150 g |
| GT1-OD16ML(-1) | 35 mA max. | 9 mA max. | Approx. 90 g |
| GT1-OD16DS(-1) | 35 mA max. | 9 mA max. | Approx. 95 g |
| GT1-OD32ML(-1) | 65 mA max. | 11 mA max. | Approx. 165 g |
| GT1-ROP08 | 40 mA max. | 350 mA max. (inrush current 30 A max.) | Approx. 405 g |
| GT1-ROS16 | 50 mA max. | 250 mA max. (inrush current 30 A max.) | Approx. 320 g |
| GT1-AD04 | 50 mA max. | 100 mA max. (inrush current 20 A max.) | Approx. 220 g |
| GT1-AD08MX | 50 mA max. | 100 mA max. (inrush current 30 A max.) | Approx. 180 g |
| GT1-DA04 | 50 mA max. | 150 mA max. (inrush current 20 A max.) | Approx. 230 g |
| GT1-DA04MX | 50 mA max. | 100 mA max. (inrush current 30 A max.) | Approx. 180 g |
| GT-TS04T | 50 mA max. | 80 mA max. (inrush current 10 A max.) | Approx. 210 g |
| GT-TS04P | 50 mA max. | 80 mA max. (inrush current 10 A max.) | Approx. 210 g |
| GT1-CT01 | 90 mA max. | 9 mA max. | Approx. 250 g |

**Note** Input Units do not consume current from the I/O power supply.

## 4-2-1 Precautions for Connecting a DC 2-wire Sensor

Check that the following conditions have been satisfied when using a DC 2-wire sensor with a Transistor Input Unit. Failure to meet these conditions may result in operating errors.

**Transistor Input Unit ON Voltage and Sensor Residual Voltage**

$V_{ON} \leq V_{CC} - V_R$

$V_{CC}$: I/O supply voltage

(Supply voltage range is 20.4 to 26.4 V, but is calculated at 20.4 V as the worst-case scenario.)

$V_{ON}$: ON voltage for the Transistor Input Unit
(15 V with a MULTIPLE I/O TERMINAL)

$V_R$: Sensor output residual voltage

The above formula can sometimes be satisfied by adjusting the I/O supply voltage ($V_{CC}$) to 26.4 V.

**Transistor Input Unit ON Current and Sensor Control Output (Load Current)**

$I_{OUT\ (min.)} \leq I_{ON} \leq I_{OUT\ (max.)}$

$I_{OUT}$: Sensor control output (load current)

$I_{ON}$: ON current of the Transistor Input Unit

$I_{ON}$ can be determined as follows:

$I_{ON} = (V_{CC} - V_R - V_F) / R_{IN}$

$V_F$: The Transistor Input Unit's internal residual voltage
(1.5 V with a MULTIPLE I/O TERMINAL)

$R_{IN}$: The Transistor Input Unit's input impedance
(4.4 kΩ with a MULTIPLE I/O TERMINAL).

When $I_{ON}$ is smaller than $I_{OUT\ (min.)}$, connect a bleeder resistor R. The bleeder resistor constant can be determined as follows:

$R \leq (V_{cc} - V_R) / (I_{OUT\ (min.)} - I_{ON})$

Power $W \geq (V_{cc} - V_R)^2 / R \times 4$ [tolerance]

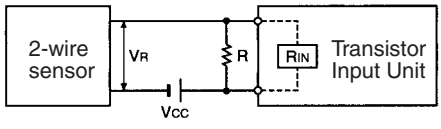


**Transistor Input Unit OFF Current and Sensor Leakage Current**

$I_{OFF} \geq I_{LEAK}$

$I_{OUT}$: OFF current of the Transistor Input Unit
(1.0 mA with a MULTIPLE I/O TERMINAL).

$I_{LEAK}$: Sensor leakage current.

If the sensor leakage current is greater than the OFF current of the Transistor Input Unit, connect a bleeder resistor R. The bleeder resistor constant can be determined as follows:

$R \leq (I_{OFF} \times R_{IN} + V_F) / I_{LEAK} - I_{OFF})$

Power $W \geq (V_{cc} - V_R)^2 / R \times 4$ [tolerance]

## 4-2-2 TS Indicator

The TS indicator is a 2-color LED. The color of the TS indicator, and whether it is lit or not, indicate the following:

| Indicator | Color | State | Meaning |
|---|---|---|---|
| TS | Green | Lit | Normal communications |
| | Red | Lit | I/O Unit interface error |
| | --- | Not lit | Under initialization, or no power supplied |

Note The meanings of the TS indicator for Communications Units, differ from those for I/O Units. For details, refer to page 200.

# 4-3 Transistor Input Units

## 4-3-1 GT1-ID16 Transistor Input Unit with Terminal Block (NPN)

### Input Specifications

| Item | Specifications |
|---|---|
| Number of input points | 16 points |
| Number of points that can be ON simultaneously | 16 points max. |

### Components

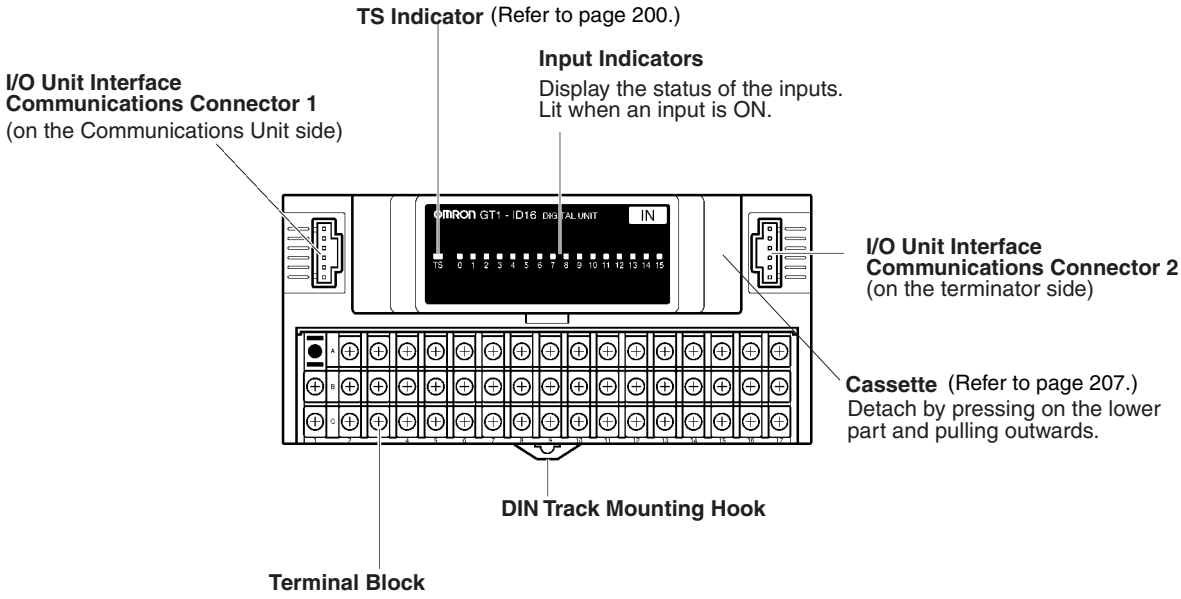


### Internal Circuits

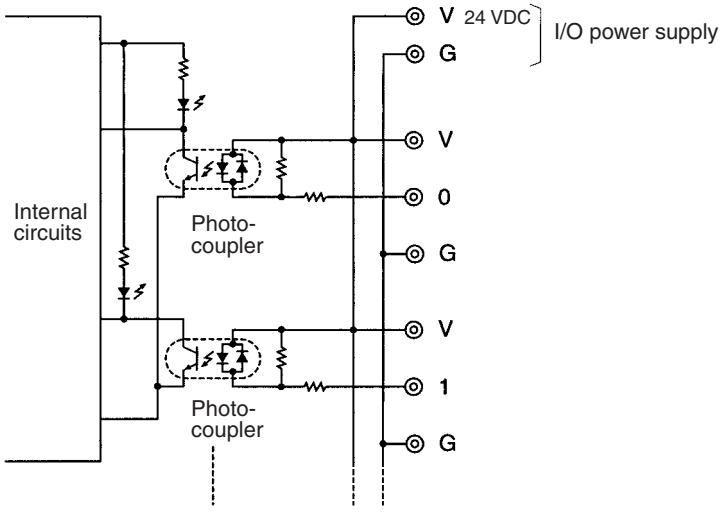

### Terminal Arrangement

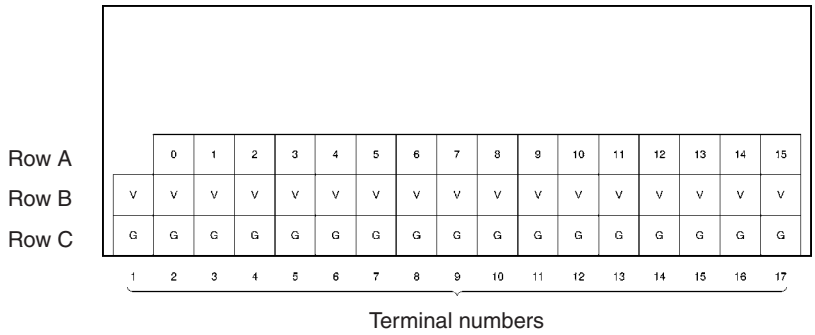


### Wiring

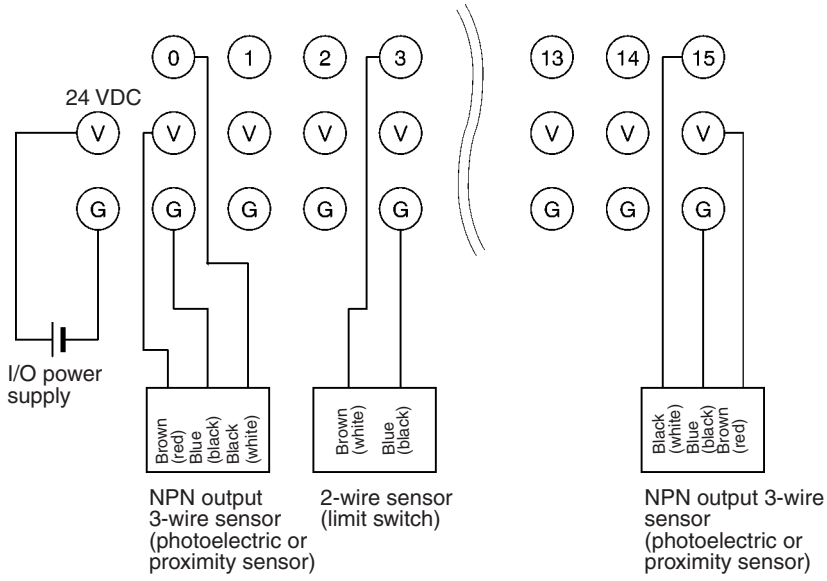


Wire colors in parentheses are the previous JIS colors for photoelectric and proximity sensors.

**Note** V terminals and G terminals are internally connected. When the I/O power is being supplied, the power can be supplied to the input devices from the V terminals and G terminals. Current supplied in this way, however, must be less than 1 A.

### Dimensions

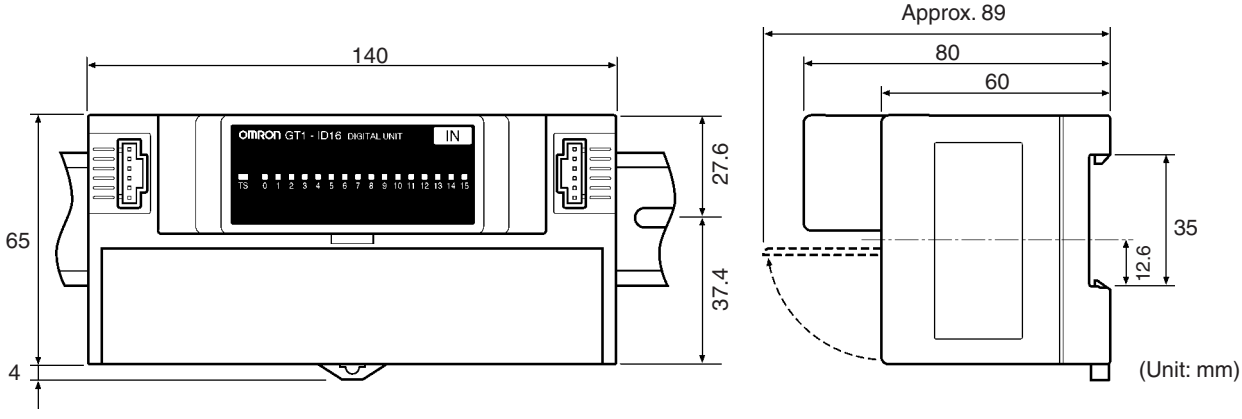


**Note** The vertical center of the Unit is 4.9 mm lower than the center of the DIN track. The Unit therefore extends downward 41.4 mm (including the mounting hook) from the DIN track center.

## 4-3-2 GT1-ID16-1 Transistor Input Unit with Terminal Block (PNP)

### Input Specifications

| Item | Specifications |
|---|---|
| Number of input points | 16 points |
| Number of points that can be ON simultaneously | 16 points max. |

### Components

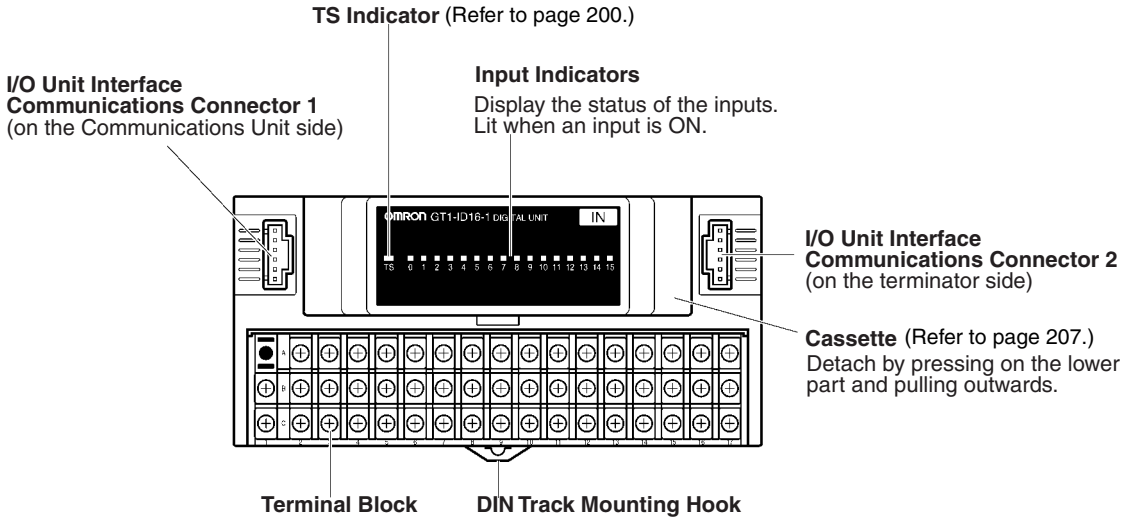


### Internal Circuits

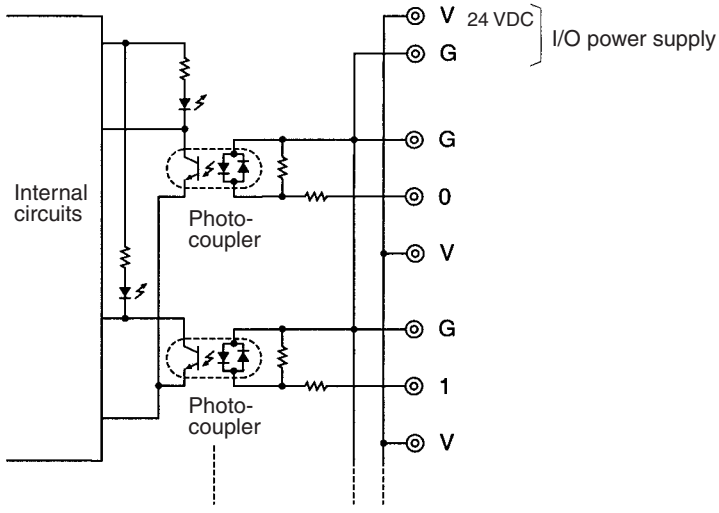


### Terminal Arrangement

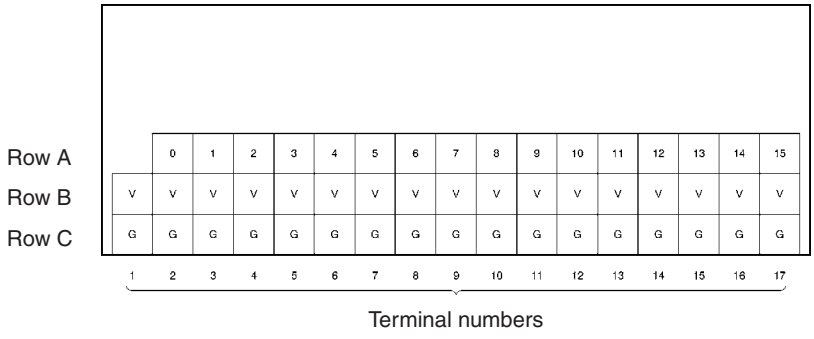

### Wiring

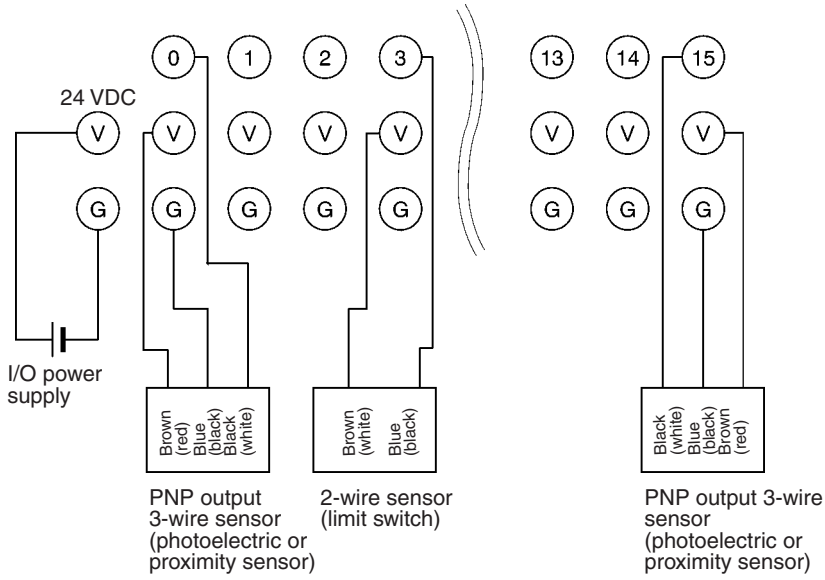


Wire colors in parentheses are the previous JIS colors for photoelectric and proximity sensors.

**Note** V terminals and G terminals are internally connected. When the I/O power is being supplied, the power can be supplied to the input devices from the V terminals and G terminals. Current supplied in this way, however, must be less than 1 A.

### Dimensions

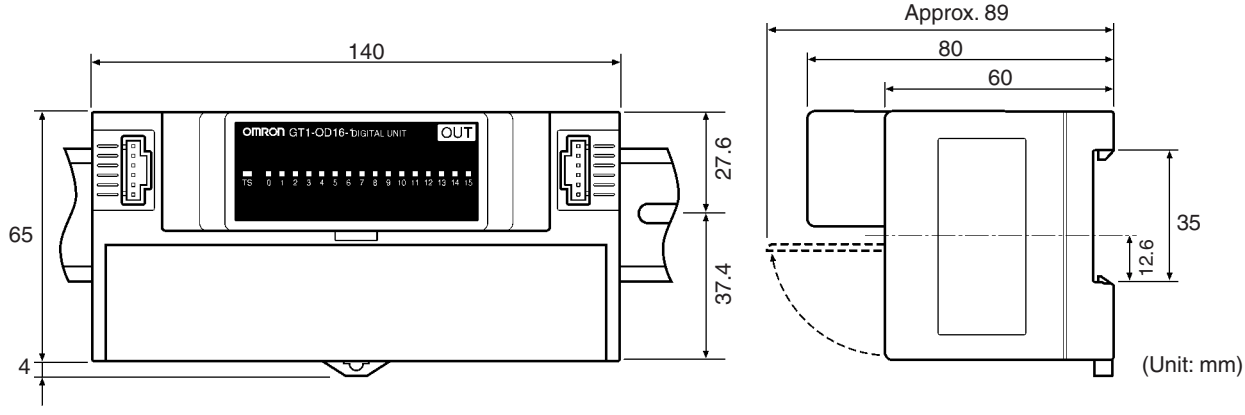


**Note** The vertical center of the Unit is 4.9 mm lower than the center of the DIN track. The Unit therefore extends downward 41.4 mm (including the mounting hook) from the DIN track center.

## 4-3-3 GT1-ID16MX Transistor Input Unit with Connector (NPN)

### Input Specifications

| Item | Specifications |
|---|---|
| Number of input points | 16 points |
| Number of points that can be ON simultaneously | 16 points max. |

### Components

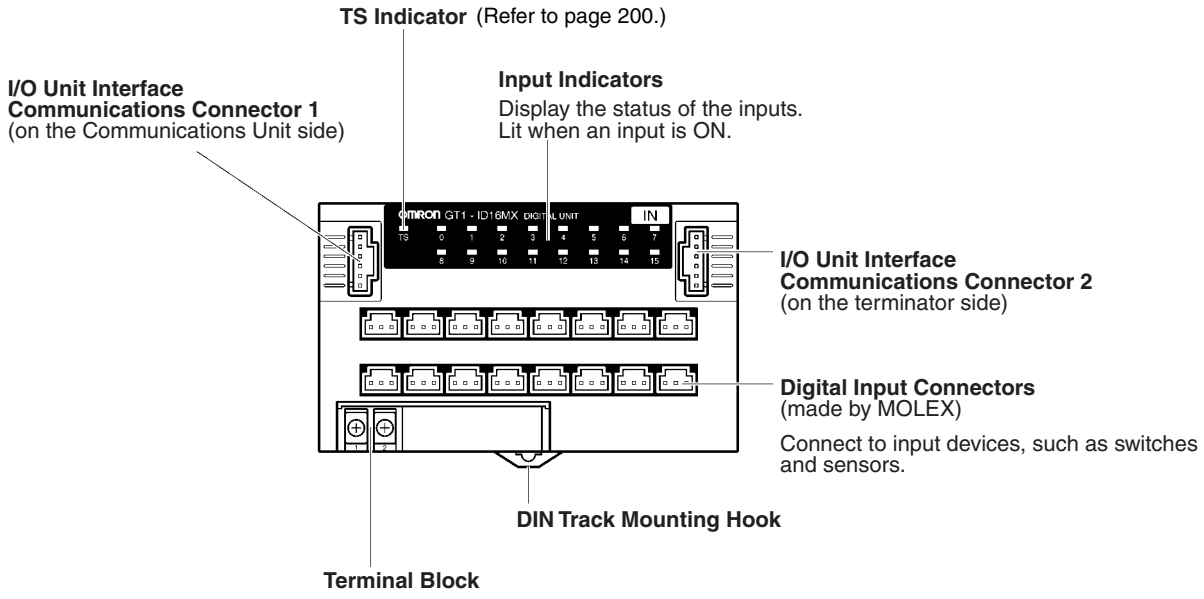


### Internal Circuits

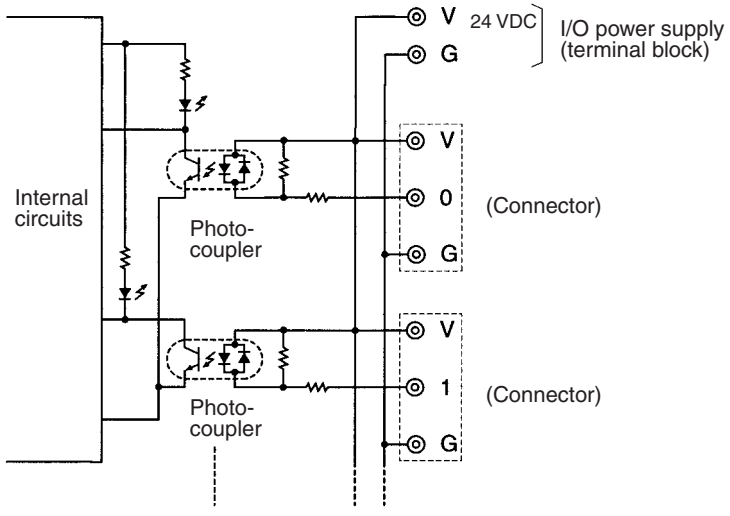


### Terminal Arrangement

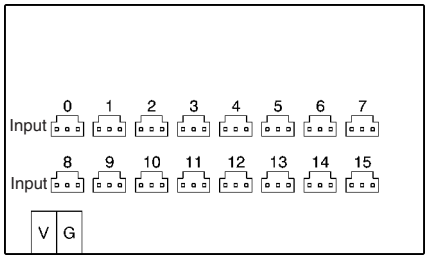

**Connector Pin Arrangement**

The arrangement of the connectors is shown in the following diagram.

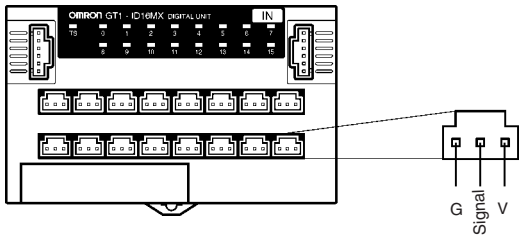


**Wiring**

Attach MOLEX connectors to the Transistor Input Unit and connect them to external devices.

**Applicable Connectors**

| Manufacturer | Connector | | Model number | Remarks |
|---|---|---|---|---|
| MOLEX | Crimp | Housing | 51030-0330 | |
| | | Reeled contacts | 70058-0004 | For AWG#24 to 30 |
| | | | 70058-0022 | For AWG#22 to 24 |
| | | Loose contacts | 70058-0204 | For AWG#24 to 30 |
| | | | 70058-0222 | For AWG#22 to 24 |
| | | Crimping tool | 57036-5000 | For AWG#22 to 26 |
| | | | 57037-5000 | For AWG#24 to 30 |

**Wiring Example**

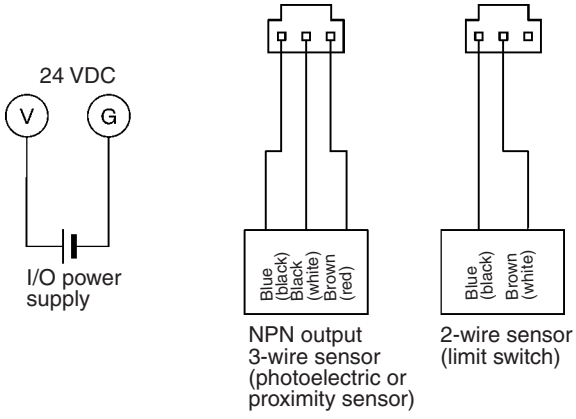


Wire colors in parentheses are the previous JIS colors for photoelectric and proximity sensors.

**Note** V terminals and V connector pins, as well as G terminals and G connector pins, are internally connected. When the I/O power is being supplied from a terminal block, the power can be supplied to the input devices from the V and G connectors. Current supplied in this way, however, must be less than 1 A.

**Dimensions**

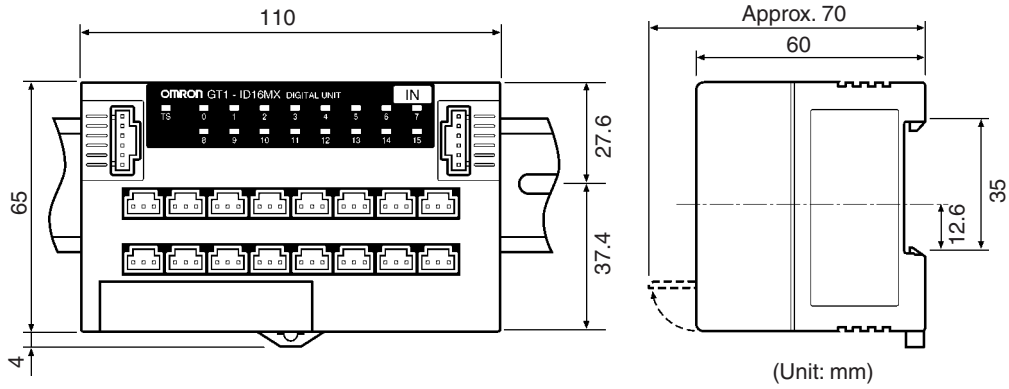


**Note** The vertical center of the Unit is 4.9 mm lower than the center of the DIN track. The Unit therefore extends downward 41.4 mm (including the mounting hook) from the DIN track center.

## 4-3-4 GT1-ID16MX-1 Transistor Input Unit with Connector (PNP)

**Input Specifications**

| Item | Specifications |
|---|---|
| Number of input points | 16 points |
| Number of points that can be ON simultaneously | 16 points max. |

**Components**

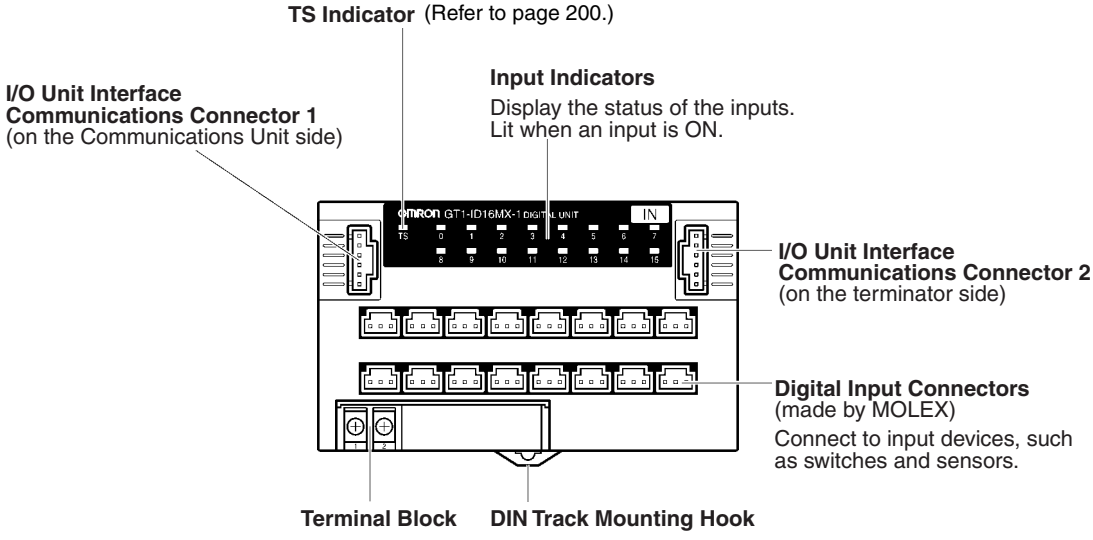

### Internal Circuits

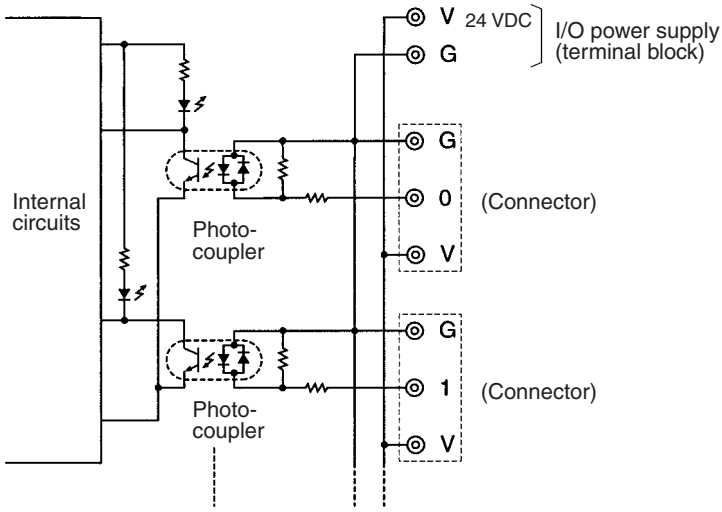


### Terminal Arrangement

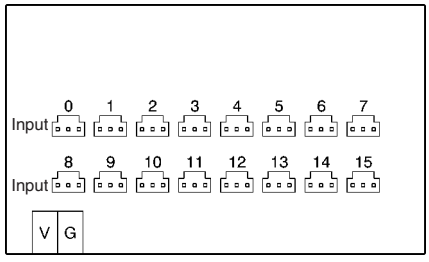


### Connector Pin Arrangement

The arrangement of the connectors is shown in the following diagram.

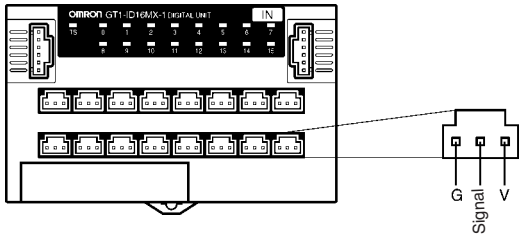


### Wiring

Attach MOLEX connectors to the Transistor Input Unit and connect them to external devices.

**Applicable Connectors**

| Manufacturer | Connector | | Model number | Remarks |
|---|---|---|---|---|
| MOLEX | Crimp | Housing | 51030-0330 | |
| | | Reeled contacts | 70058-0004 | For AWG#24 to 30 |
| | | | 70058-0022 | For AWG#22 to 24 |
| | | Loose contacts | 70058-0204 | For AWG#24 to 30 |
| | | | 70058-0222 | For AWG#22 to 24 |
| | | Crimping tool | 57036-5000 | For AWG#22 to 26 |
| | | | 57037-5000 | For AWG#24 to 30 |

**Wiring Examples**

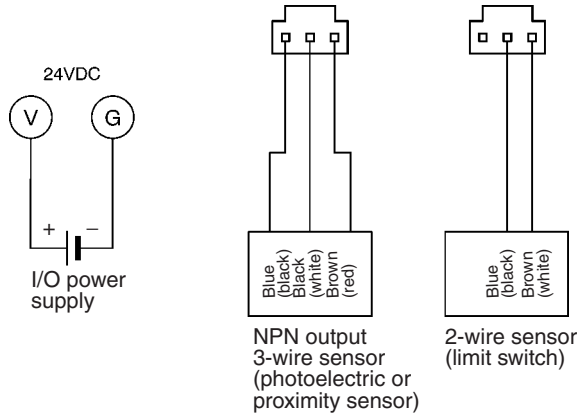


Wire colors in parentheses are the previous JIS colors for photoelectric and proximity sensors.

**Note** V terminals and V connector pins, as well as G terminals and G connector pins, are internally connected. When the I/O power is being supplied from a terminal block, the power can be supplied to the input devices from the V and G connectors. Current supplied in this way, however, must be less than 1 A.

**Dimensions**

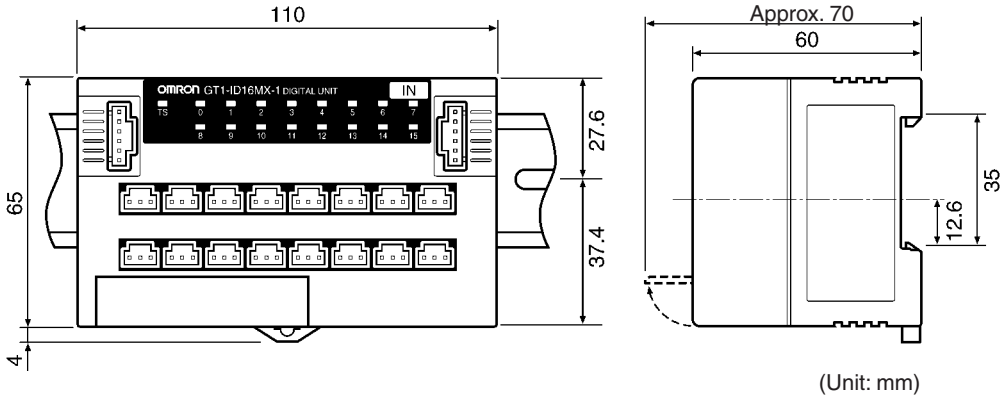


(Unit: mm)

**Note** The vertical center of the Unit is 4.9 mm lower than the center of the DIN track. The Unit therefore extends downward 41.4 mm (including the mounting hook) from the DIN track center.

## 4-3-5 GT1-ID16ML Transistor Input Unit with Connector (NPN)

**Input Specifications**

| Item | Specifications |
|---|---|
| Number of input points | 16 points |
| Number of points that can be ON simultaneously | 16 points max. |

Note The number of input points that can be ON simultaneously depends on the ambient temperature, as shown below.

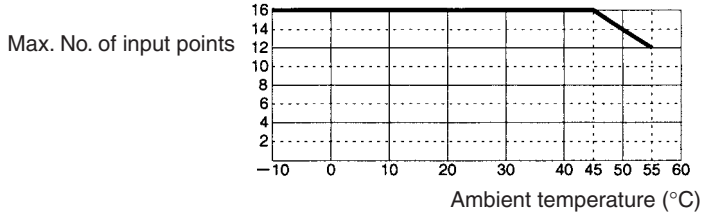

### Components

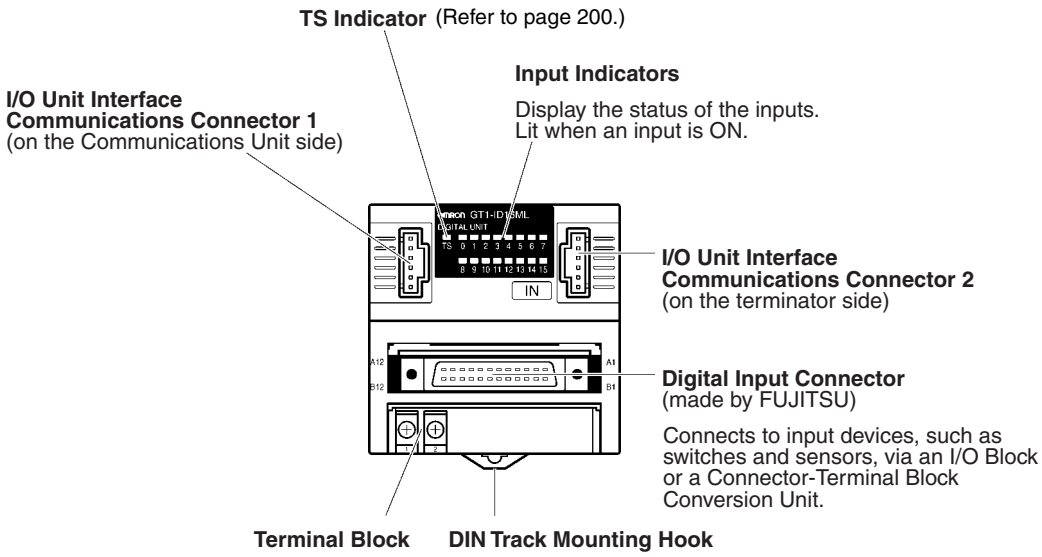


### Internal Circuits

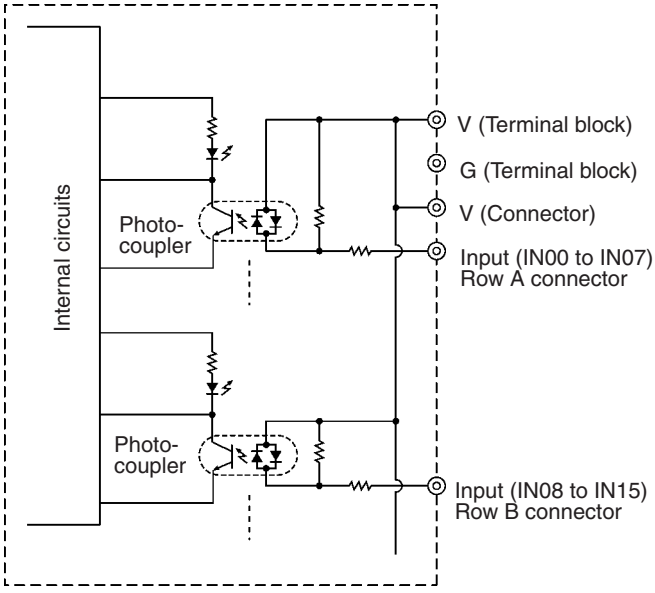


### Terminal Arrangement

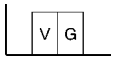

### Connector Pin Arrangement

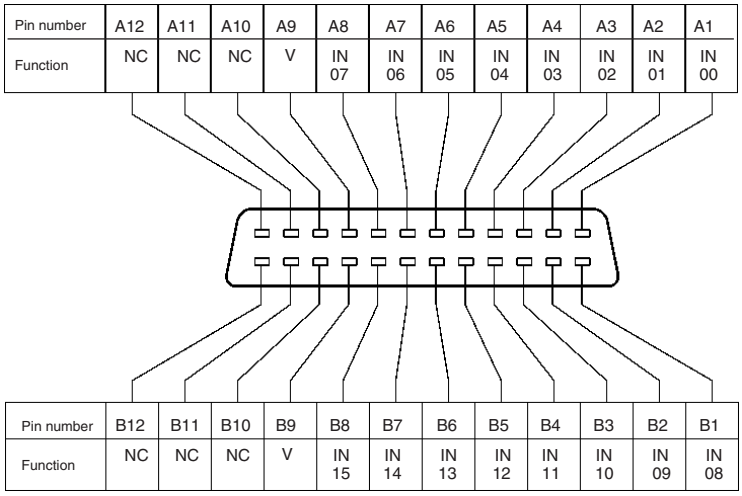


### Wiring

Attach a FUJITSU connector to the Transistor Input Unit and connect it to the external devices.

#### Applicable Connectors

Three types of connectors can be attached to the cable depending on the assembly method. When creating your own cables, use one of the following connectors.

| Manufacturer | Model number | Remarks |
|---|---|---|
| FUJITSU | FCN361J024-AU | Soldered |
| | FCN363J024-AU | Crimp |
| | FCN367J024-AU/F | Pressure-welded |

#### Cables with Connectors

When a Transistor Input Unit with a high-density connector is to be connected to an OMRON I/O Block or a Connector-Terminal Block Conversion Unit, use the cables listed in the following table (sold separately).

| Manufacturer | Model number | Device |
|---|---|---|
| OMRON | XW2Z-□□□A | Connector-Terminal Block Conversion Unit<br>XW2B-20G4 or<br>XW2B-20G5 |
| | G79-□□□C | I/O Block<br>G7TC-I□16 |

### Dimensions

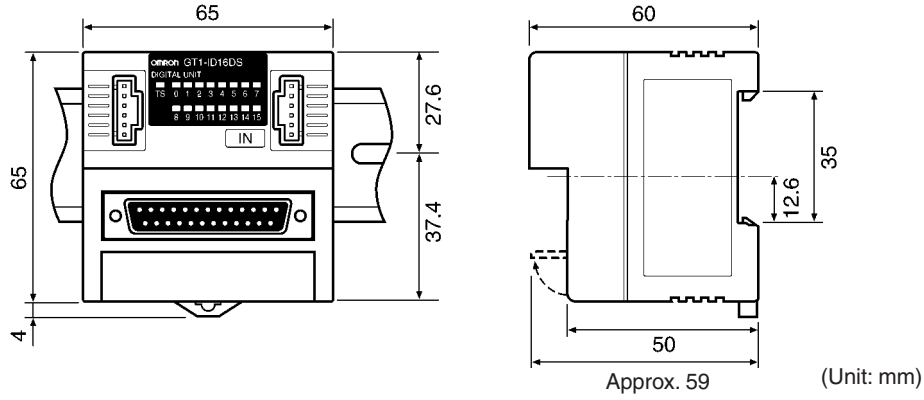


**Note** The vertical center of the Unit is 4.9 mm lower than the center of the DIN track. The Unit therefore extends downward 41.4 mm (including the mounting hook) from the DIN track center.

## 4-3-6 GT1-ID16ML-1 Transistor Input Unit with Connector (PNP)

### Input Specifications

| Item | Specifications |
|---|---|
| Number of input points | 16 points |
| Number of points that can be ON simultaneously | 16 points max. |

Note The number of input points that can be ON simultaneously depends on the ambient temperature, as shown below.

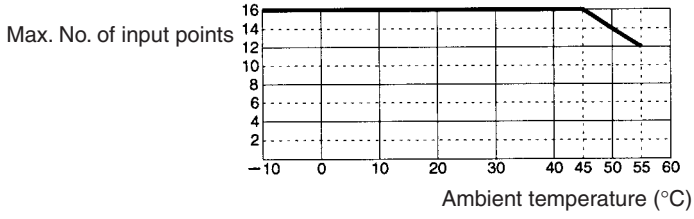


### Components

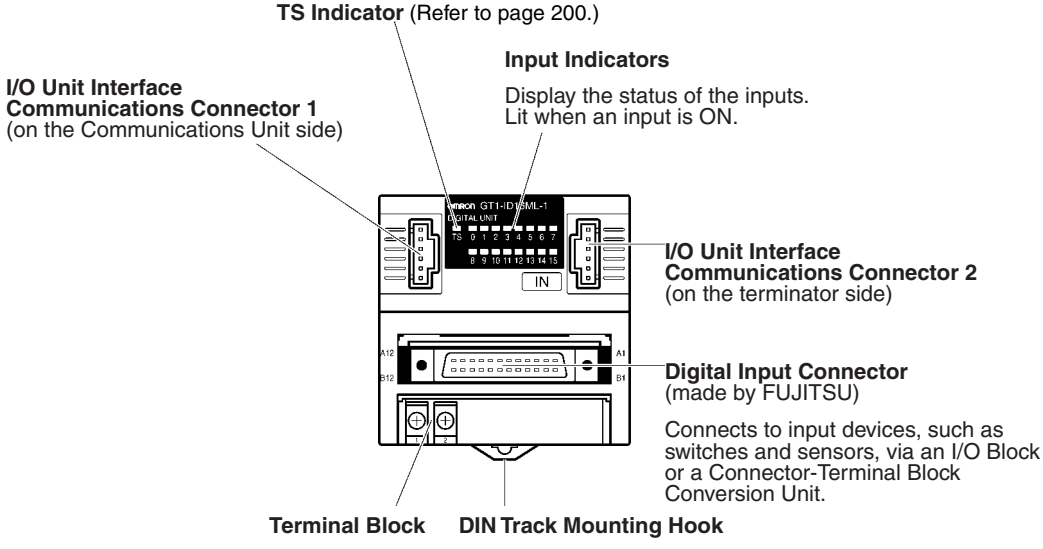

### Internal Circuits

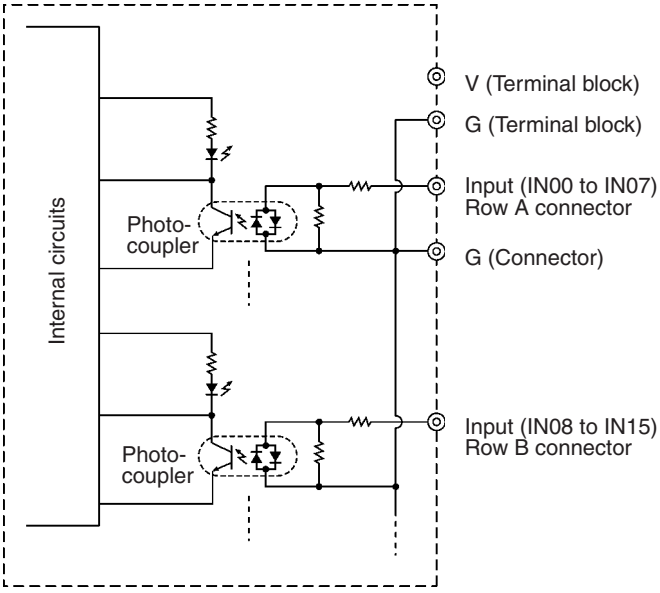


### Terminal Arrangement

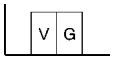


### Connector Pin Arrangement

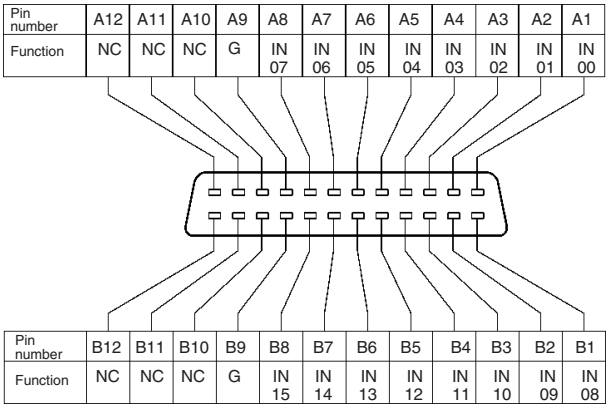

| Pin number | A12 | A11 | A10 | A9 | A8 | A7 | A6 | A5 | A4 | A3 | A2 | A1 |
|---|---|---|---|---|---|---|---|---|---|---|---|---|
| Function | NC | NC | NC | G | IN 07 | IN 06 | IN 05 | IN 04 | IN 03 | IN 02 | IN 01 | IN 00 |

| Pin number | B12 | B11 | B10 | B9 | B8 | B7 | B6 | B5 | B4 | B3 | B2 | B1 |
|---|---|---|---|---|---|---|---|---|---|---|---|---|
| Function | NC | NC | NC | G | IN 15 | IN 14 | IN 13 | IN 12 | IN 11 | IN 10 | IN 09 | IN 08 |

### Wiring

Attach a FUJITSU connector to the Transistor Input Unit and connect it to the external devices.

**Applicable Connectors**

Three types of connectors can be attached to the cable depending on the assembly method. When creating your own cables, use one of the following connectors.

| Manufacturer | Model number | Remarks |
|---|---|---|
| FUJITSU | FCN361J024-AU | Soldered |
| | FCN363J024-AU | Crimp |
| | FCN367J024-AU/F | Pressure-welded |

**Cables with Connectors**

When a Transistor Input Unit with a high-density connector is to be connected to an OMRON I/O Block or a Connector-Terminal Block Conversion Unit, use the cables listed in the following table (sold separately).

| Manufacturer | Model number | Device |
|---|---|---|
| OMRON | XW2Z-□□□A | Connector-Terminal Block Conversion Unit<br>XW2B-20G4 or<br>XW2B-20G5 |

**Dimensions**

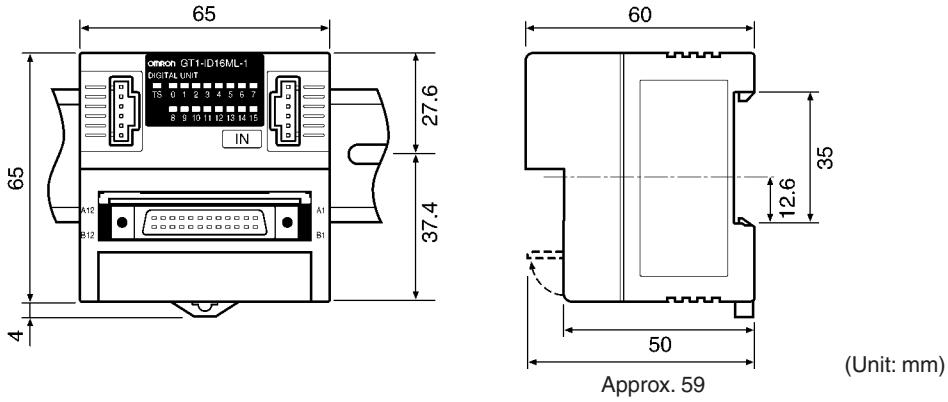


**Note** The vertical center of the Unit is 4.9 mm lower than the center of the DIN track. The Unit therefore extends downward 41.4 mm (including the mounting hook) from the DIN track center.

## 4-3-7 GT1-ID16DS Transistor Input Unit with Connector (NPN)

**Input Specifications**

| Item | Specifications |
|---|---|
| Number of input points | 16 points |
| Number of points that can be ON simultaneously | 16 points max. |

Note The number of input points that can be ON simultaneously depends on the ambient temperature, as shown below.

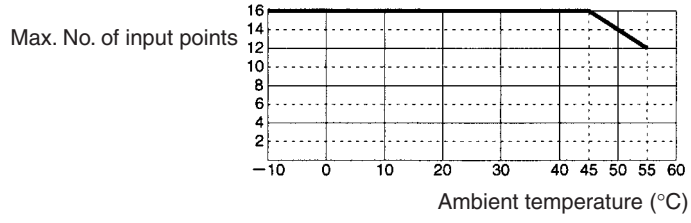

### Components

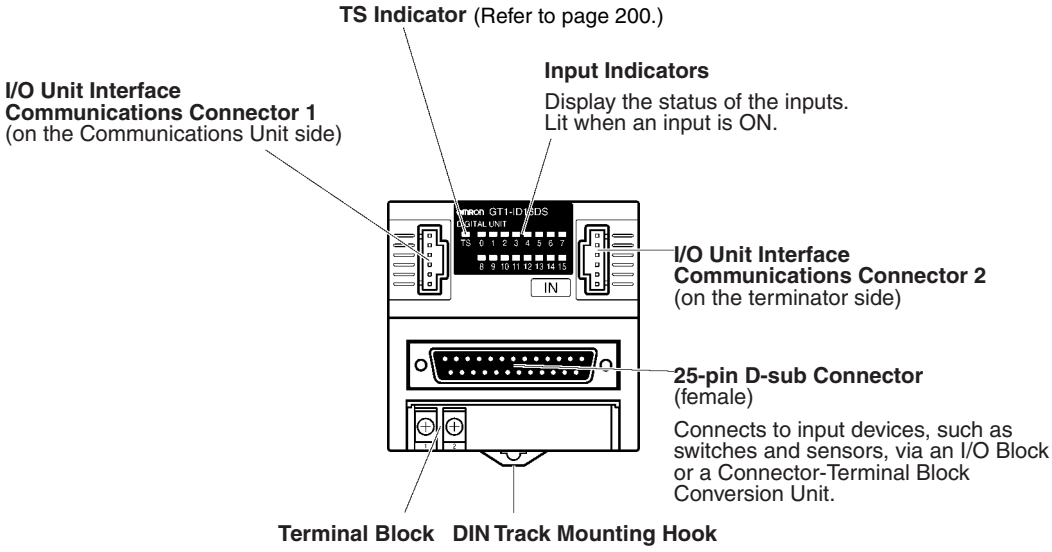


### Internal Circuits

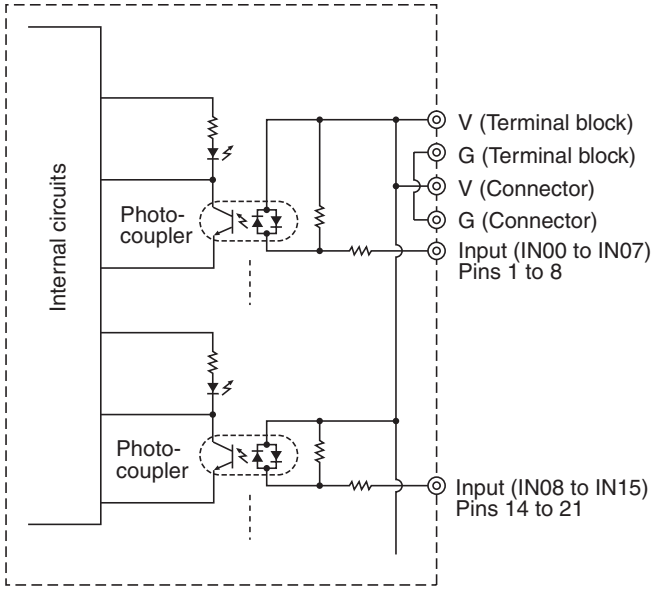


### Terminal Arrangement

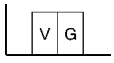

### Connector Pin Arrangement

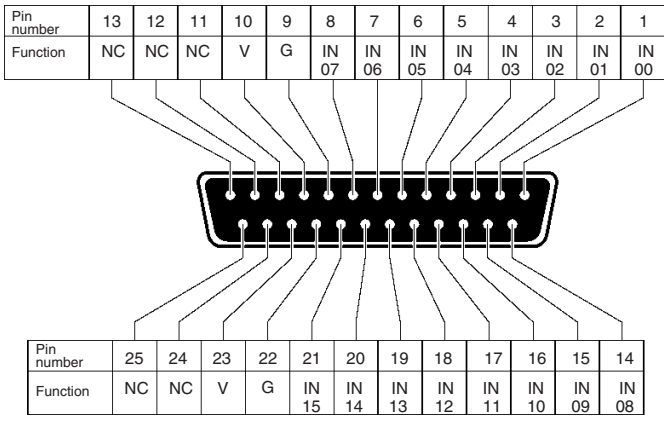


### Wiring

Attach a 25-pin D-sub connector to the Transistor Input Unit and connect it to the external devices.

**Applicable Connectors**

When creating your own cables, use one of the following connectors.

| Manufacturer | Model number | Remarks |
|---|---|---|
| OMRON | XW2S-2513 | Hood |
| | XW2A-2501 | Plug |

### Dimensions

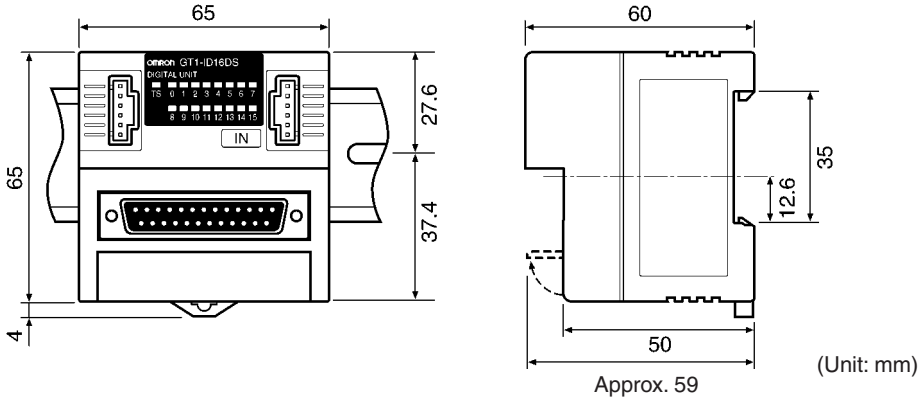


**Note** The vertical center of the Unit is 4.9 mm lower than the center of the DIN track. The Unit therefore extends downward 41.4 mm (including the mounting hook) from the DIN track center.

## 4-3-8 GT1-ID16DS-1 Transistor Input Unit with Connector (PNP)

### Input Specifications

| Item | Specifications |
|---|---|
| Number of input points | 16 points |
| Number of points that can be ON simultaneously | 16 points max. |

Note The number of input points that can be ON simultaneously depends on the ambient temperature, as shown below.

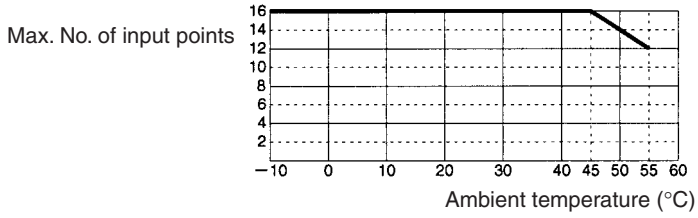


### Components

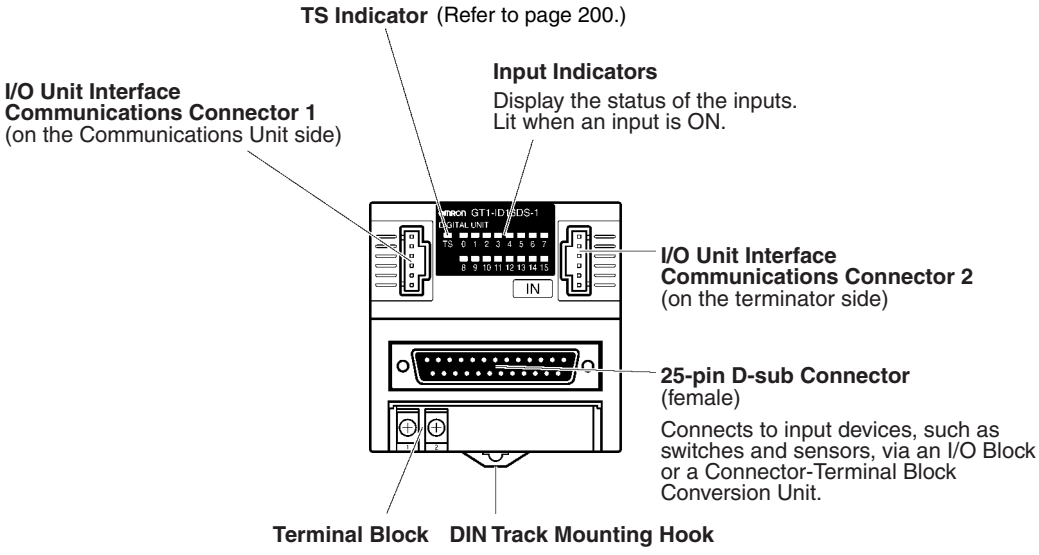


### Internal Circuits

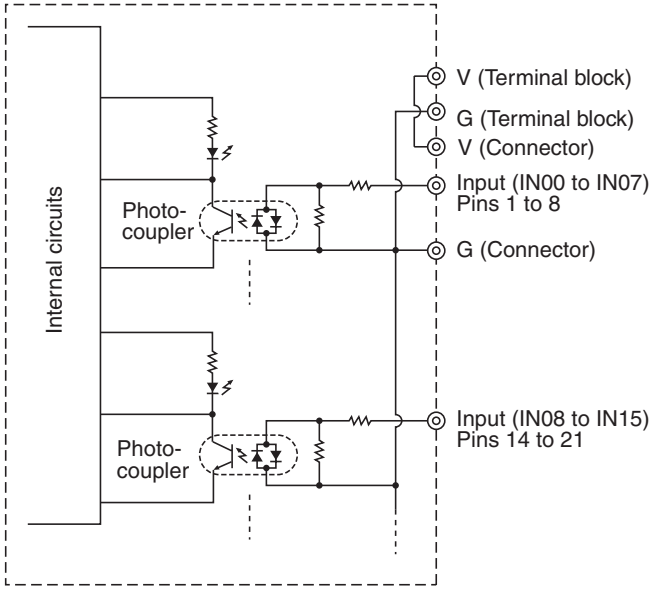

### Terminal Arrangement

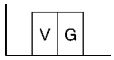


### Connector Pin Arrangement

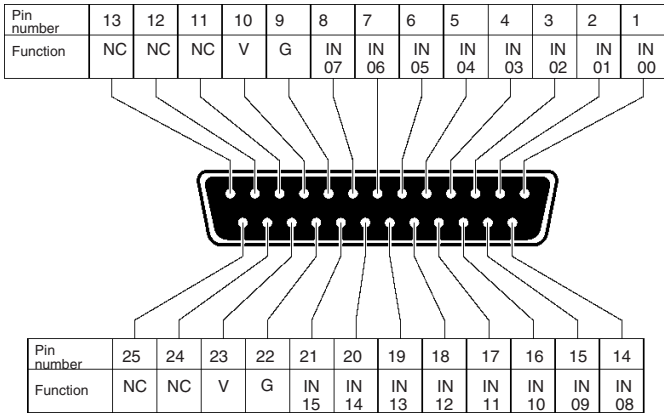

| Pin number | 13 | 12 | 11 | 10 | 9 | 8 | 7 | 6 | 5 | 4 | 3 | 2 | 1 |
|---|---|---|---|---|---|---|---|---|---|---|---|---|---|
| Function | NC | NC | NC | V | G | IN 07 | IN 06 | IN 05 | IN 04 | IN 03 | IN 02 | IN 01 | IN 00 |

| Pin number | 25 | 24 | 23 | 22 | 21 | 20 | 19 | 18 | 17 | 16 | 15 | 14 |
|---|---|---|---|---|---|---|---|---|---|---|---|---|
| Function | NC | NC | V | G | IN 15 | IN 14 | IN 13 | IN 12 | IN 11 | IN 10 | IN 09 | IN 08 |

### Wiring

Attach a 25-pin D-sub connector to the Transistor Input Unit and connect it to the external devices.

#### Applicable Connectors

When creating your own cables, use one of the following connectors.

| Manufacturer | Model number | Remarks |
|---|---|---|
| OMRON | XW2S-2513 | Hood |
| | XW2A-2501 | Plug |

### Dimensions

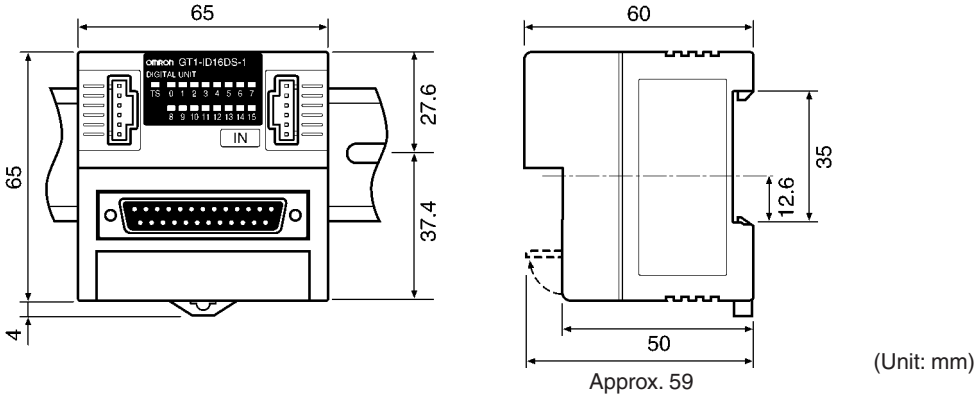


**Note** The vertical center of the Unit is 4.9 mm lower than the center of the DIN track. The Unit therefore extends downward 41.4 mm (including the mounting hook) from the DIN track center.

## 4-3-9 GT1-ID32ML Transistor Input Unit with High-density Connector (NPN)

### Input Specifications

| Item | Specifications |
|---|---|
| Number of input points | 32 points |
| Number of points that can be ON simultaneously | 32 points max. |

### Components

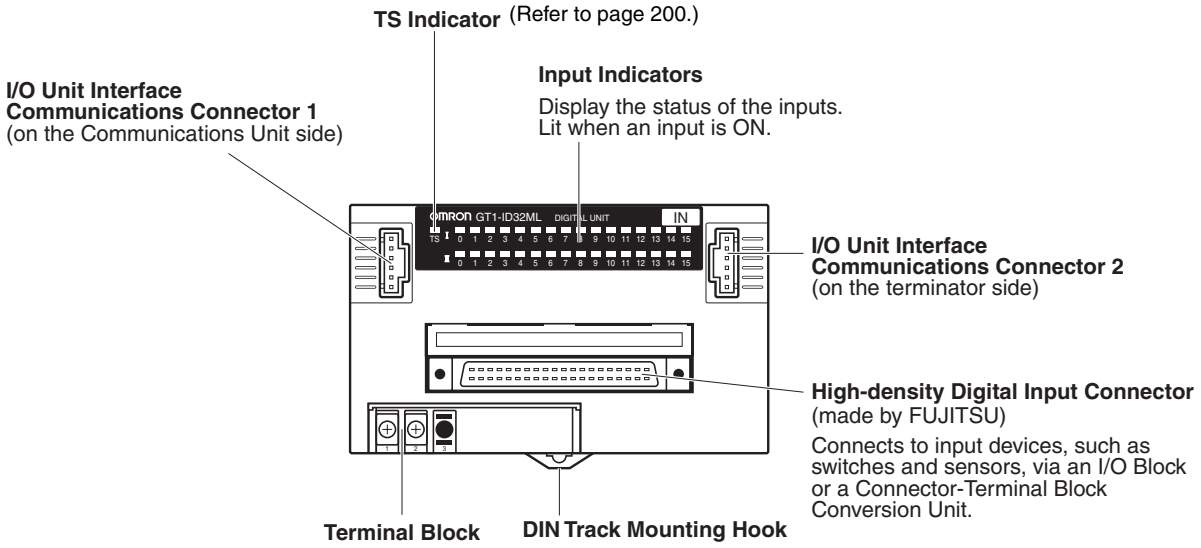


### Internal Circuits

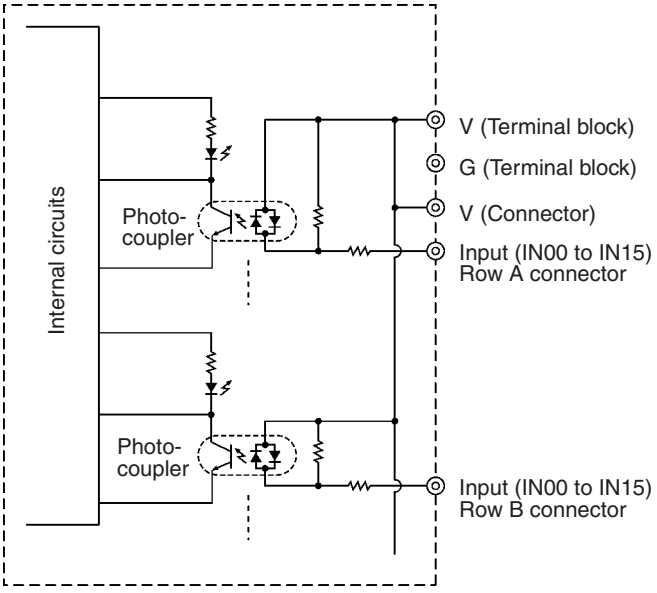


### Terminal Arrangement

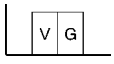

### Connector Pin Arrangement

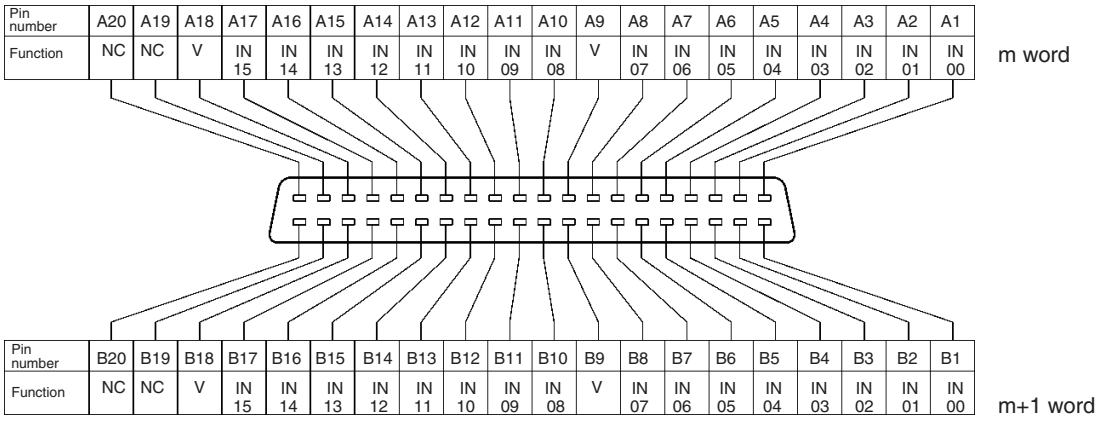


**Wiring**

Attach a FUJITSU connector to the Transistor Input Unit and connect it to the external devices.

**Applicable Connectors**

Three types of connectors can be attached to the cable depending on the assembly method. When creating your own cables, use one of the following connectors.

| Manufacturer | Model number | Remarks |
|---|---|---|
| FUJITSU | FCN361J040-AU | Soldered |
| | FCN363J040-AU | Crimp |
| | FCN367J040-AU/F | Pressure-welded |

**Cables with Connectors**

When a Transistor Input Unit with a high-density connector is to be connected to an OMRON I/O Block or a Connector-Terminal Block Conversion Unit, use the cables listed in the following table (sold separately).

| Manufacturer | Model number | Device |
|---|---|---|
| OMRON | XW2Z-□□□B | Connector-Terminal Block Conversion Unit<br>XW2B-40G4 or<br>XW2B-40G5 |
| | G79-I□C-□ | I/O Block<br>G7TC-I□16 |

**Note** Make sure there are no more than 16 points are turned ON at the same time.

**Dimensions**

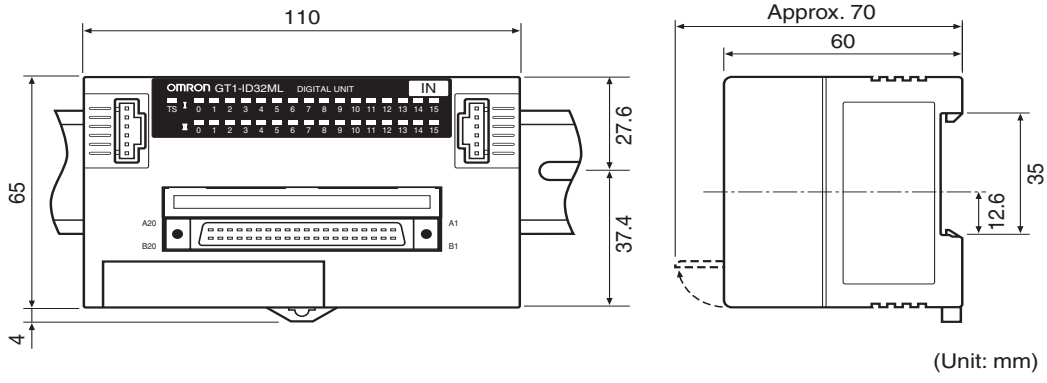


**Note** The vertical center of the Unit is 4.9 mm lower than the center of the DIN track. The Unit therefore extends downward 41.4 mm (including the mounting hook) from the DIN track center.

## 4-3-10 GT1-ID32ML-1 Transistor Input Unit with High-density Connector (PNP)

### Input Specifications

| Item | Specifications |
|---|---|
| Number of input points | 32 points |
| Number of points that can be ON simultaneously | 32 points max. |

### Components

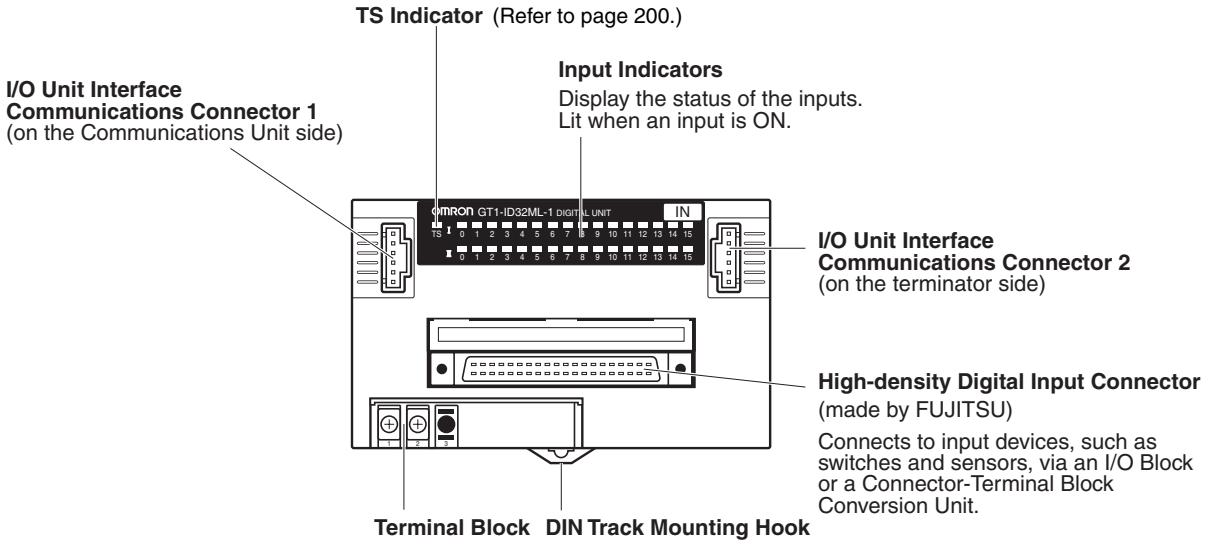


### Internal Circuits

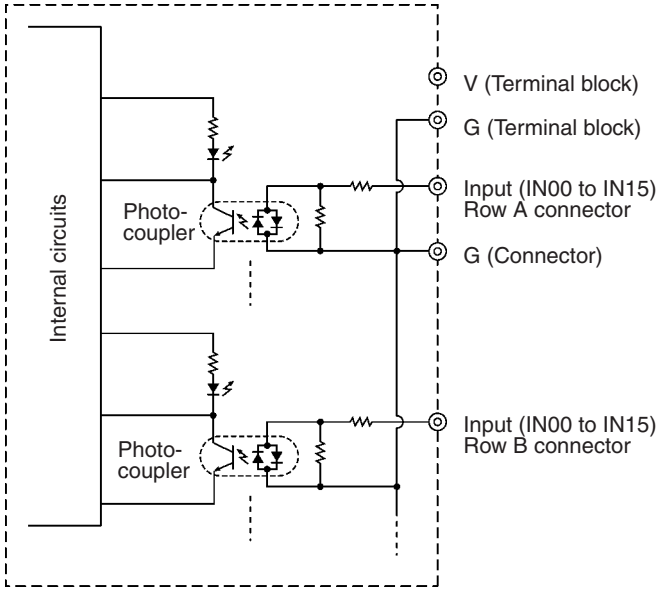


### Terminal Arrangement

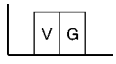

### Connector Pin Arrangement

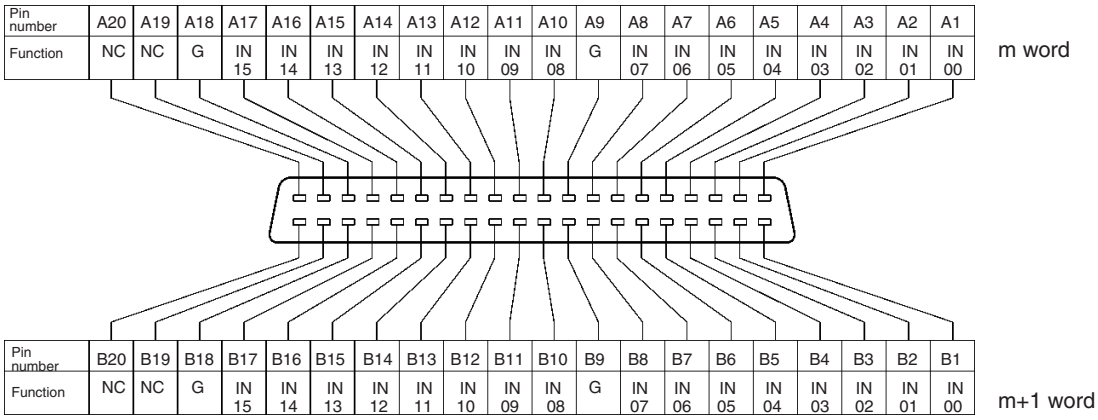


**Wiring**

Attach a FUJITSU connector to the Transistor Input Unit and connect it to the external devices.

#### Applicable Connectors

Three types of connectors can be attached to the cable depending on the assembly method. When creating your own cables, use one of the following connectors.

| Manufacturer | Model number | Remarks |
|---|---|---|
| FUJITSU | FCN361J040-AU | Soldered |
| | FCN363J040-AU | Crimp |
| | FCN367J040-AU/F | Pressure-welded |

#### Cables with Connectors

When a Transistor Input Unit with a high-density connector is to be connected to an OMRON I/O Block or a Connector-Terminal Block Conversion Unit, use the cables listed in the following table (sold separately).

| Manufacturer | Model number | Device |
|---|---|---|
| OMRON | XW2Z-□□□B | Connector-Terminal Block Conversion Unit<br>XW2B-40G4 or<br>XW2B-40G5 |

**Note** Make sure there are no more than 16 points are turned ON at the same time.

**Dimensions**

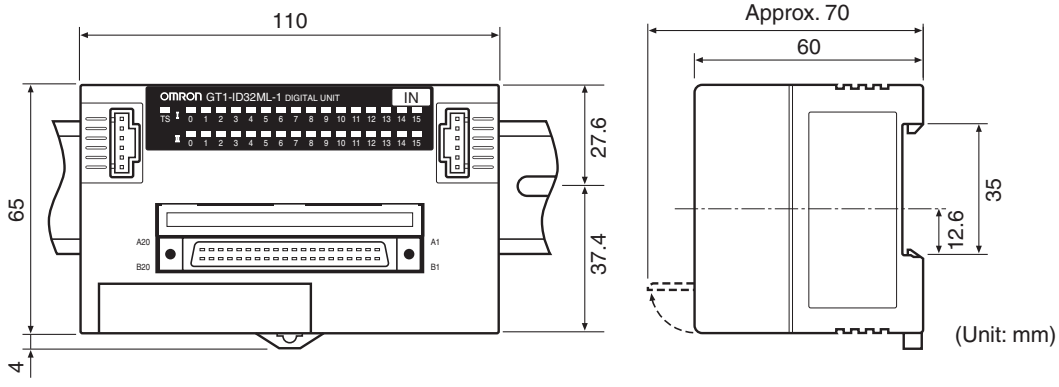


**Note** The vertical center of the Unit is 4.9 mm lower than the center of the DIN track. The Unit therefore extends downward 41.4 mm (including the mounting hook) from the DIN track center.

# 4-4 Transistor Output Units

## 4-4-1 GT1-OD16 Transistor Output Unit with Terminal Block (NPN)

### Output Specifications

| Item | Specifications |
|---|---|
| Number of outputs | 16 points |
| Current per common | 4 A max. |

### Components

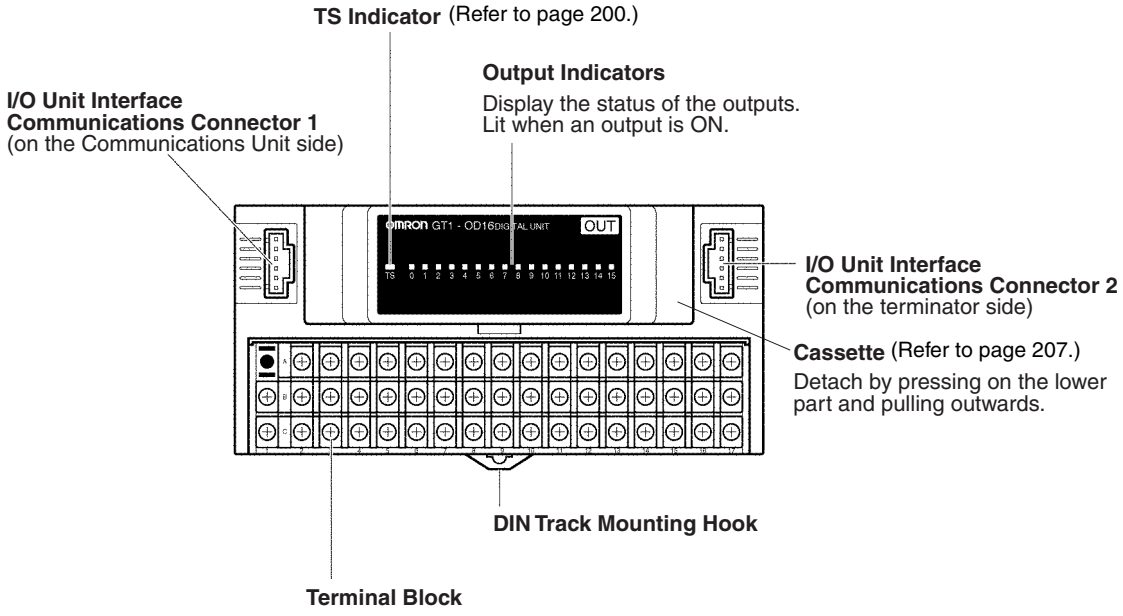


### Internal Circuits

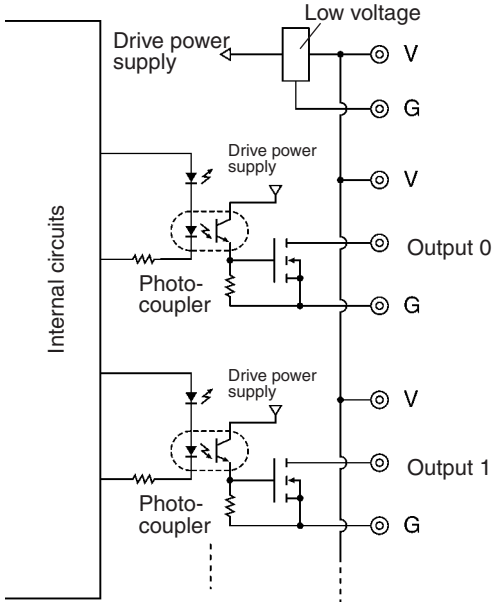

### Terminal Arrangement

| | | | | | | | | | | | | | | | | | |
|---|---|---|---|---|---|---|---|---|---|---|---|---|---|---|---|---|---|
| Row A | | 0 | 1 | 2 | 3 | 4 | 5 | 6 | 7 | 8 | 9 | 10 | 11 | 12 | 13 | 14 | 15 |
| Row B | V | V | V | V | V | V | V | V | V | V | V | V | V | V | V | V | V |
| Row C | G | G | G | G | G | G | G | G | G | G | G | G | G | G | G | G | G |
| | 1 | 2 | 3 | 4 | 5 | 6 | 7 | 8 | 9 | 10 | 11 | 12 | 13 | 14 | 15 | 16 | 17 |

Terminal numbers

### Wiring

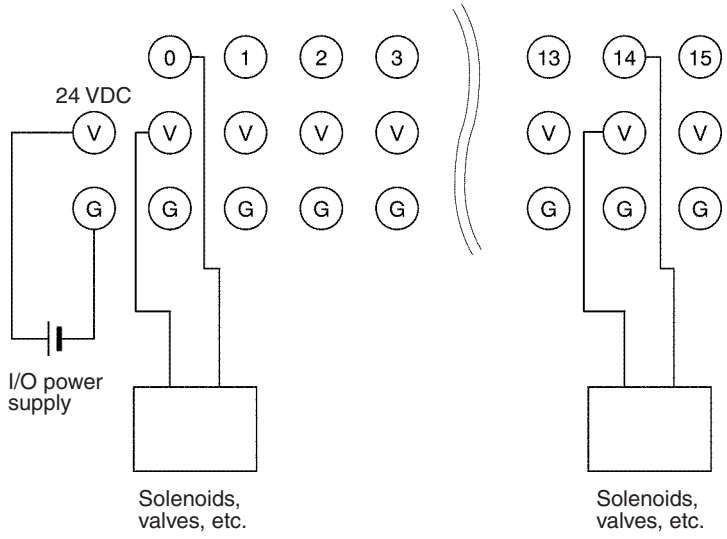


**Note** V terminals and G terminals are internally connected. When the I/O power is being supplied, the power can be supplied to the output devices from the V terminals and G terminals. Current supplied in this way, however, must be less than 4 A.

### Dimensions

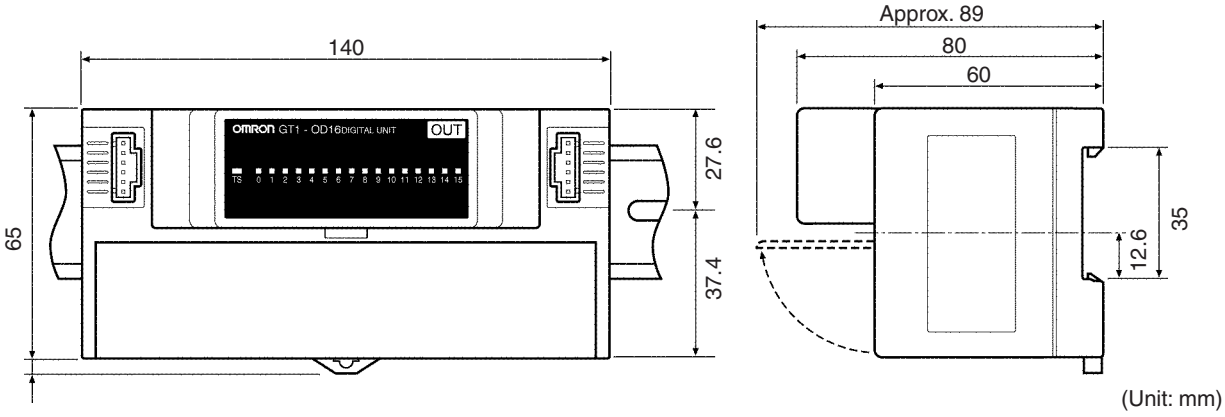


**Note** The vertical center of the Unit is 4.9 mm lower than the center of the DIN track. The Unit therefore extends downward 41.4 mm (including the mounting hook) from the DIN track center.

## 4-4-2 GT1-OD16-1 Transistor Output Unit with Terminal Block (PNP)

### Output Specifications

| Item | Specifications |
|---|---|
| Number of outputs | 16 points |
| Current per common | 4 A max. |

### Components

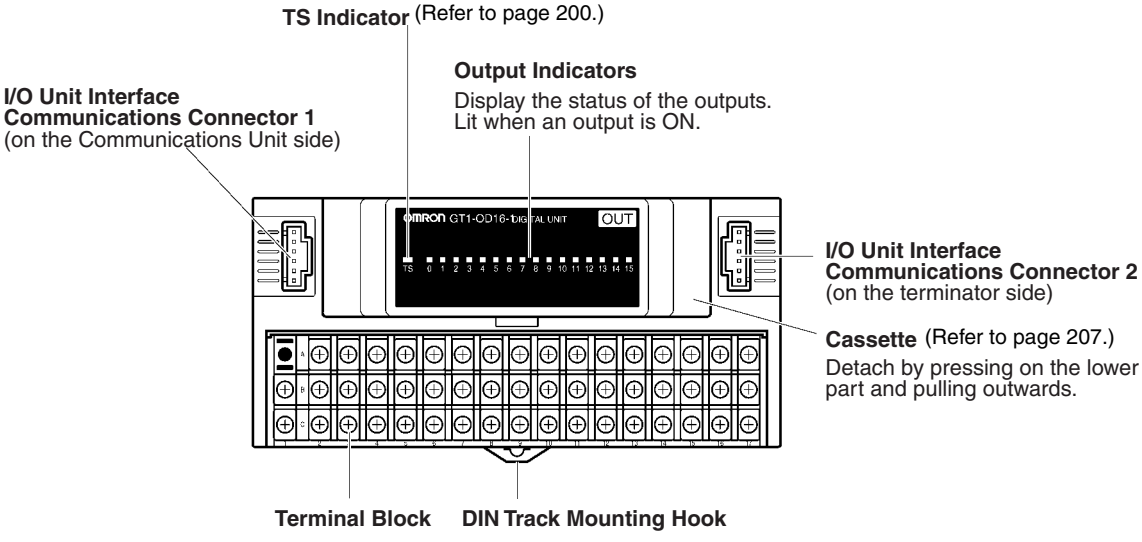

## Internal Circuits

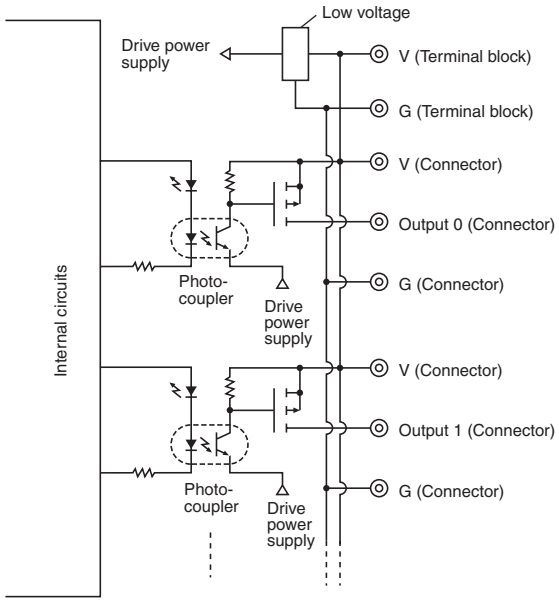


## Terminal Arrangement

| | | | | | | | | | | | | | | | | | |
|---|---|---|---|---|---|---|---|---|---|---|---|---|---|---|---|---|---|
| Row A | | 0 | 1 | 2 | 3 | 4 | 5 | 6 | 7 | 8 | 9 | 10 | 11 | 12 | 13 | 14 | 15 |
| Row B | V | V | V | V | V | V | V | V | V | V | V | V | V | V | V | V | V |
| Row C | G | G | G | G | G | G | G | G | G | G | G | G | G | G | G | G | G |
| Terminal numbers | 1 | 2 | 3 | 4 | 5 | 6 | 7 | 8 | 9 | 10 | 11 | 12 | 13 | 14 | 15 | 16 | 17 |

**Wiring**

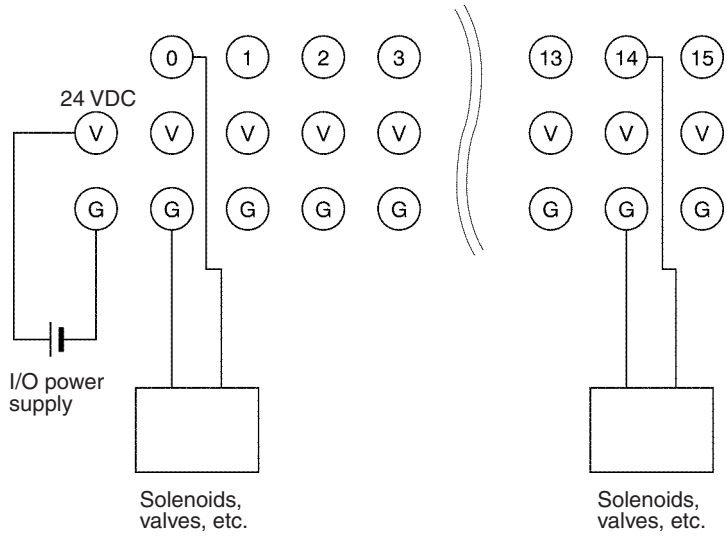


**Note** V terminals and G terminals are internally connected. When the I/O power is being supplied, the power can be supplied to the output devices from the V terminals and G terminals. Current supplied in this way, however, must be less than 4 A.

**Dimensions**

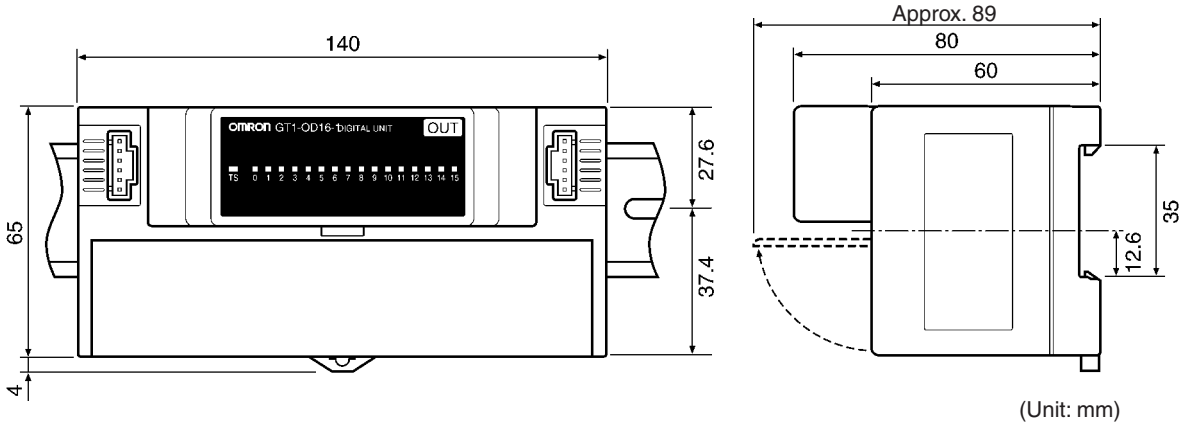


**Note** The vertical center of the Unit is 4.9 mm lower than the center of the DIN track. The Unit therefore extends downward 41.4 mm (including the mounting hook) from the DIN track center.

## 4-4-3 GT1-OD16MX Transistor Output Unit with Connector (NPN)

### Output Specifications

| Item | Specifications |
|---|---|
| Number of outputs | 16 points |
| Current per common | 2 A max. |

### Components

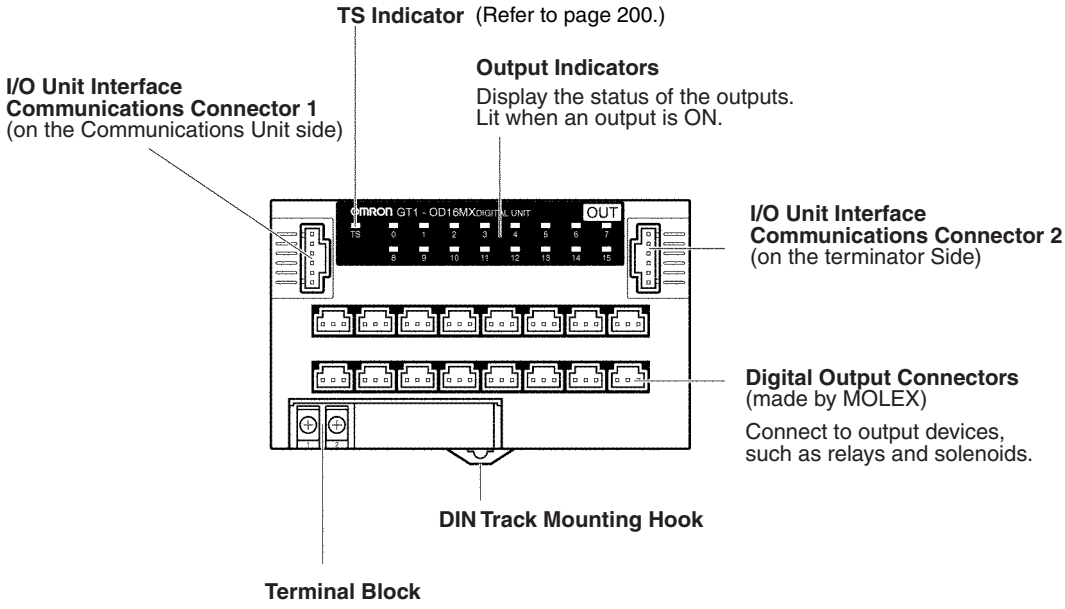


### Internal Circuits

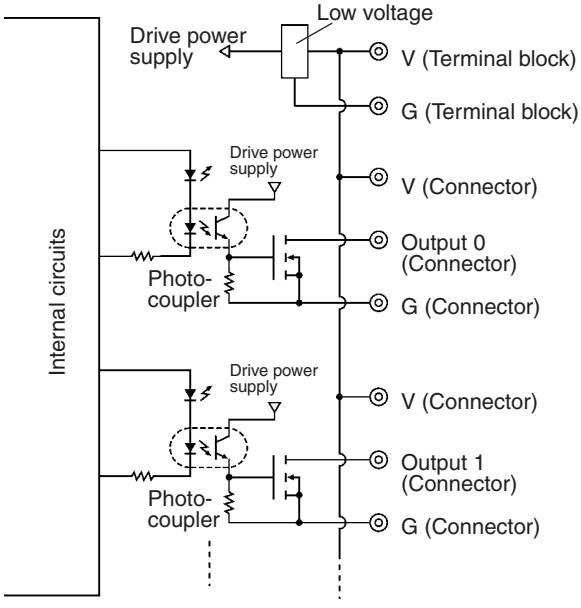

### Terminal Arrangement

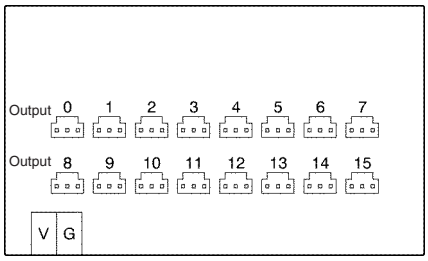


### Connector Pin Arrangement

The following diagram shows the pin arrangement for the connector.

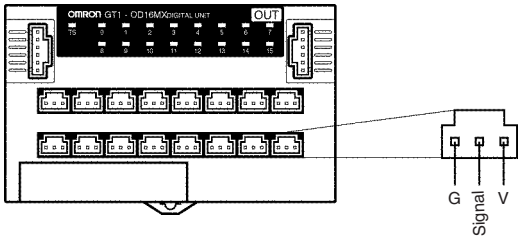


### Wiring

Attach MOLEX connectors to the Transistor Output Unit and connect them to external devices.

**Applicable Connectors**

| Manufacturer | Connector | | Model number | Remarks |
|---|---|---|---|---|
| MOLEX | Crimp | Housing | 51030-0330 | --- |
| | | Reeled contacts | 70058-0004 | For AWG#24 to 30 |
| | | | 70058-0022 | For AWG#22 to 24 |
| | | Loose contacts | 70058-0204 | For AWG#24 to 30 |
| | | | 70058-0222 | For AWG#22 to 24 |
| | | Crimping tool | 57036-5000 | For AWG#22 to 26 |
| | | | 57037-5000 | For AWG#24 to 30 |

**Wiring Examples**

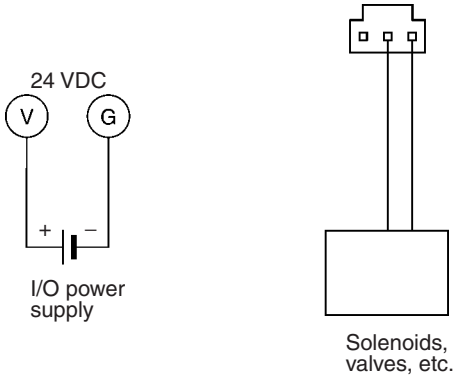


**Note** V terminals and V connector pins, as well as G terminals and G connector pins, are internally connected. When the I/O power is being supplied from a terminal block, the power can be supplied to the output devices from the V and G connectors. Current supplied in this way, however, must be less than 2 A.

### Dimensions

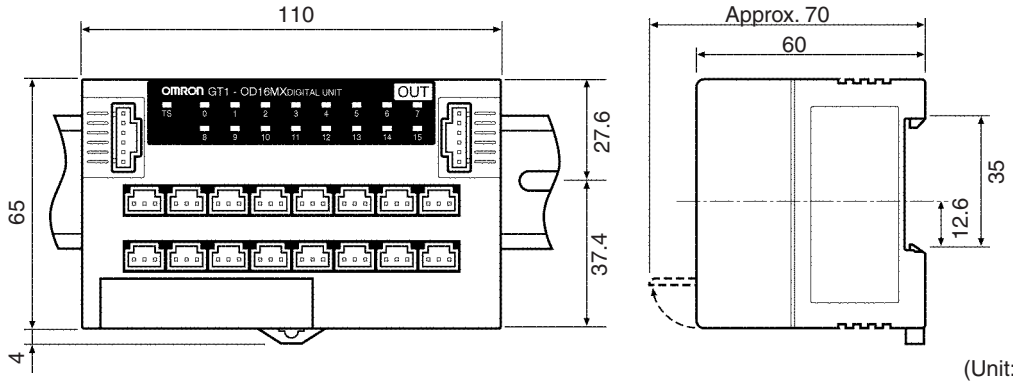


**Note** The vertical center of the Unit is 4.9 mm lower than the center of the DIN track. The Unit therefore extends downward 41.4 mm (including the mounting hook) from the DIN track center.

## 4-4-4 GT1-OD16MX-1 Transistor Output Unit with Connector (PNP)

### Output Specifications

| Item | Specifications |
|---|---|
| Number of outputs | 16 points |
| Current per common | 2 A max. |

### Components

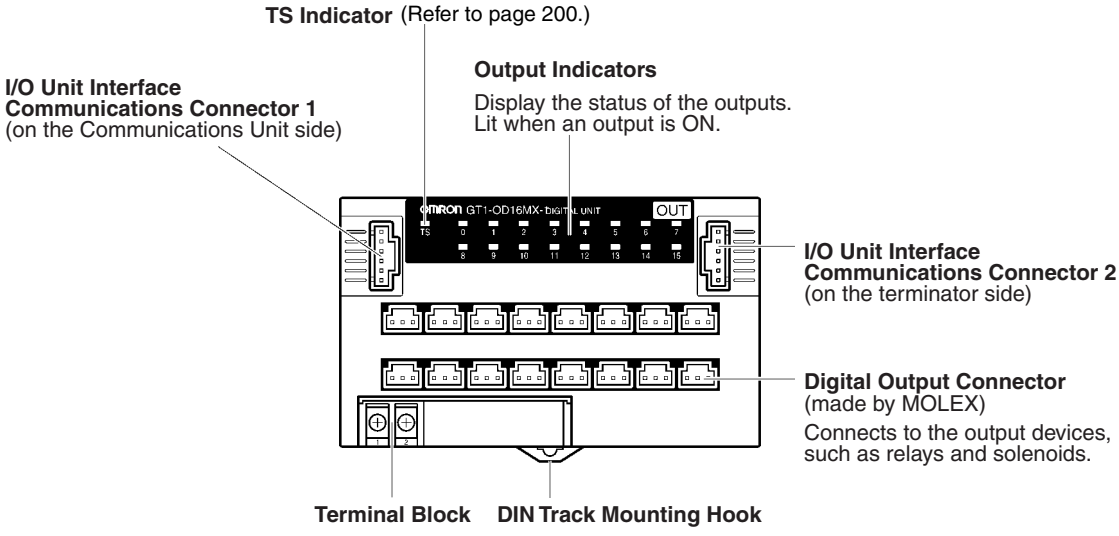

### Internal Circuits

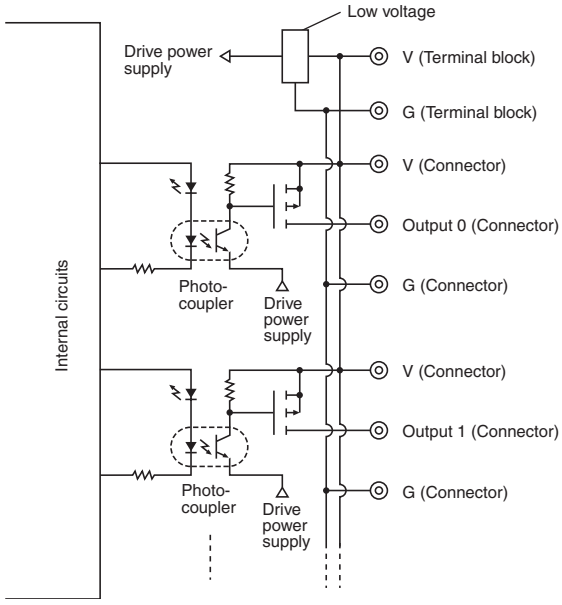


### Terminal Arrangement

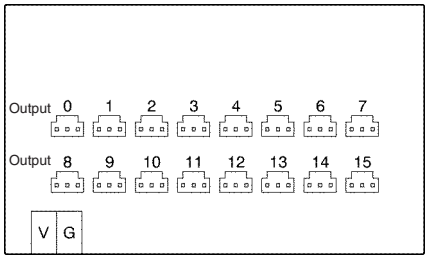


### Connector Pin Arrangement

The following diagram shows the pin arrangement for the connector.

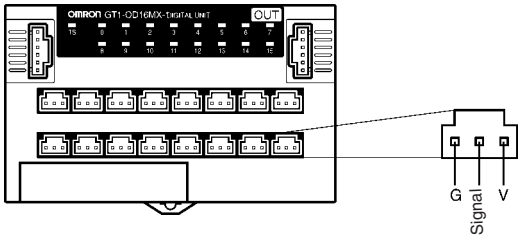


### Wiring

Attach MOLEX connectors to the Transistor Output Unit and connect them to external devices.

**Applicable Connectors**

| Manufacturer | Connector | | Model number | Remarks |
|---|---|---|---|---|
| MOLEX | Crimp | Housing | 51030-0330 | --- |
| | | Reeled contacts | 70058-0004 | For AWG#24 to 30 |
| | | | 70058-0022 | For AWG#22 to 24 |
| | | Loose contacts | 70058-0204 | For AWG#24 to 30 |
| | | | 70058-0222 | For AWG#22 to 24 |
| | | Crimping tool | 57036-5000 | For AWG#22 to 26 |
| | | | 57037-5000 | For AWG#24 to 30 |

**Wiring Examples**

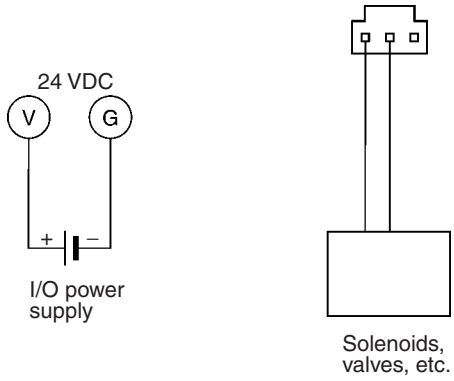


**Note** V terminals and V connector pins, as well as G terminals and G connector pins, are internally connected. When the I/O power is being supplied from a terminal block, the power can be supplied to the output devices from the V and G connectors. Current supplied in this way, however, must be less than 2 A.

**Dimensions**

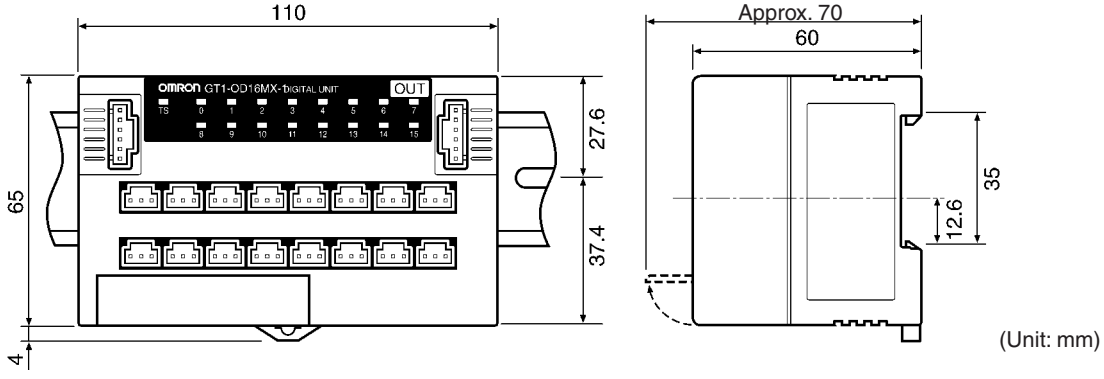


**Note** The vertical center of the Unit is 4.9 mm lower than the center of the DIN track. The Unit therefore extends downward 41.4 mm (including the mounting hook) from the DIN track center.

## 4-4-5 GT1-OD16ML Transistor Output Unit with Connector (NPN)

### Output Specifications

| Item | Specifications |
|---|---|
| Number of outputs | 16 points |
| Current per common | With connectors: 2 A max.<br>With terminal block: 2.5 A max. |

### Components

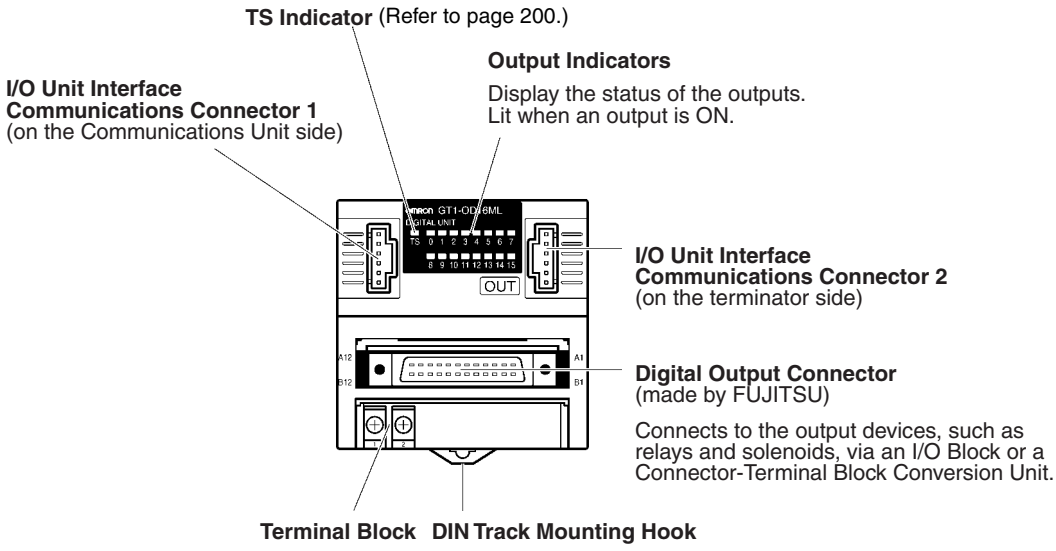


### Internal Circuits

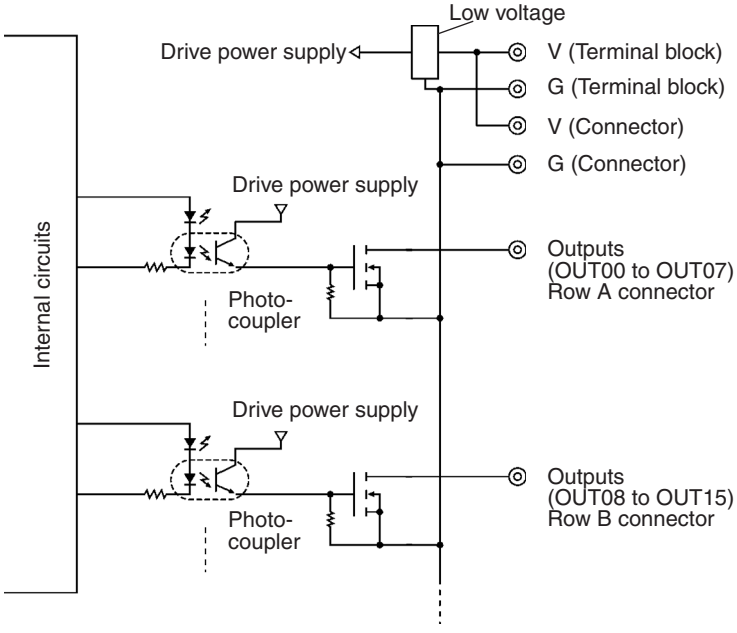


### Terminal Arrangement

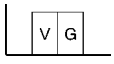

### Connector Pin Arrangement

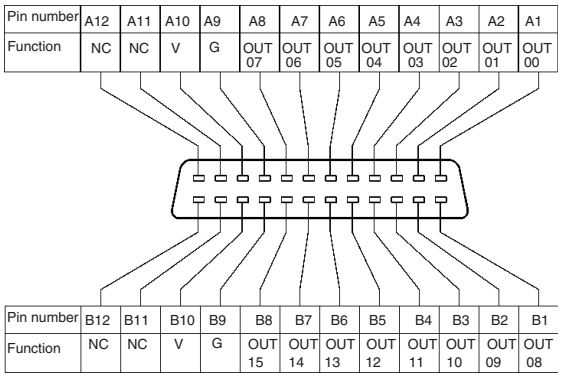


### Wiring

Attach a FUJITSU connector to the Transistor Output Unit and connect to external devices.

#### Applicable Connectors

Three types of connectors can be attached to the cable, depending on the assembly method. When creating your own cables, use one of the following connectors.

| Manufacturer | Model number | Remarks |
|---|---|---|
| FUJITSU | FCN361J024-AU | Soldered |
| | FCN363J024-AU | Crimp |
| | FCN367J024-AU/F | Pressure-welded |

#### Connector Cables

When a Transistor Output Unit (connector) is to be connected to an OMRON I/O Block or a Connector-Terminal Block Conversion Unit, use the cables (sold separately) listed in the following table.

| Manufacturer | Model number | Corresponding device |
|---|---|---|
| OMRON | XW2Z-□□□A | Connector-Terminal Block Conversion Unit<br>XW2B-20G4<br>XW2B-20G5 |
| | G79-□□□C | I/O Block<br>G7TC-OC16<br>G70D-SOC16<br>G70D-FOM16<br>G70D-VSOC16<br>G70A-ZOC16-3<br>M7F |

**Note** V terminals and G terminals are internally connected. When the I/O power is being supplied, the power can be supplied to the output devices from the V and G connectors. Current supplied in this way, however, must be less than 2 A. If, instead of using the V and G connectors, the power supply is wired to the terminal block as shown in the following diagram, the current supplied must be less than 2.5 A.

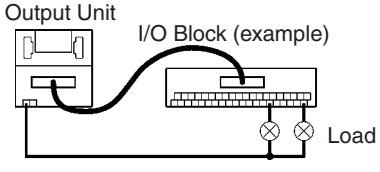

### Dimensions

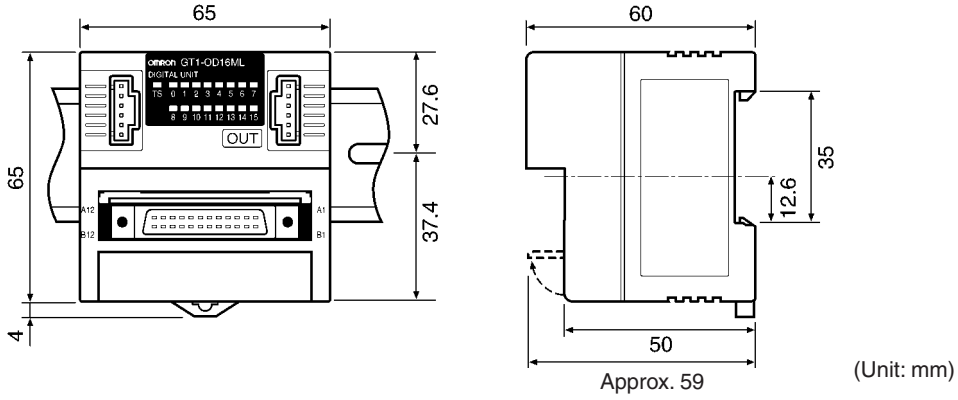


**Note** The vertical center of the Unit is 4.9 mm lower than the center of the DIN track. The Unit therefore extends downward 41.4 mm (including the mounting hook) from the DIN track center.

## 4-4-6 GT1-OD16ML-1 Transistor Output Unit with Connector (PNP)

### Output Specifications

| Item | Specifications |
|---|---|
| Number of outputs | 16 points |
| Current per common | With connectors: 2 A max.<br>With terminal block: 2.5 A max. |

### Components

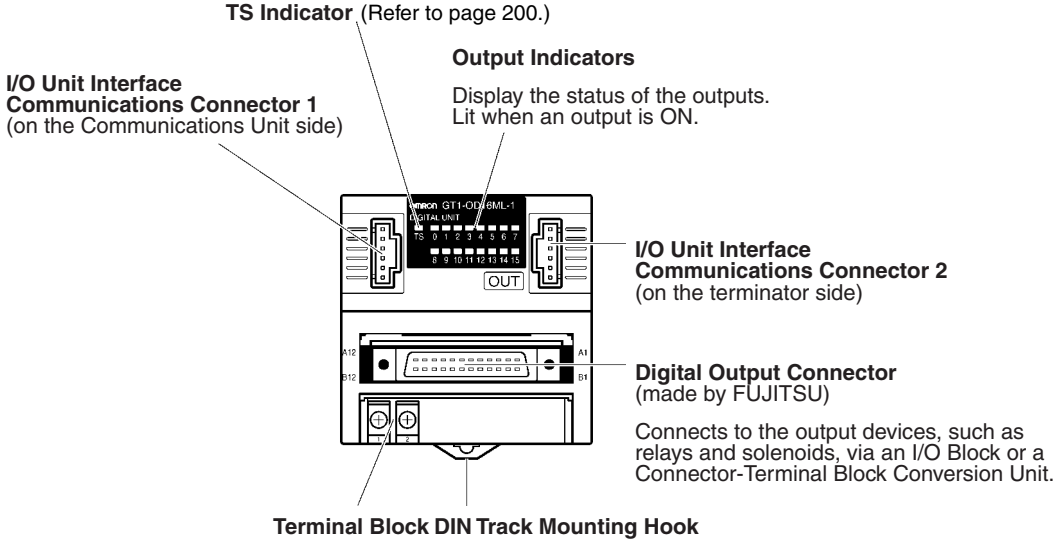

### Internal Circuits

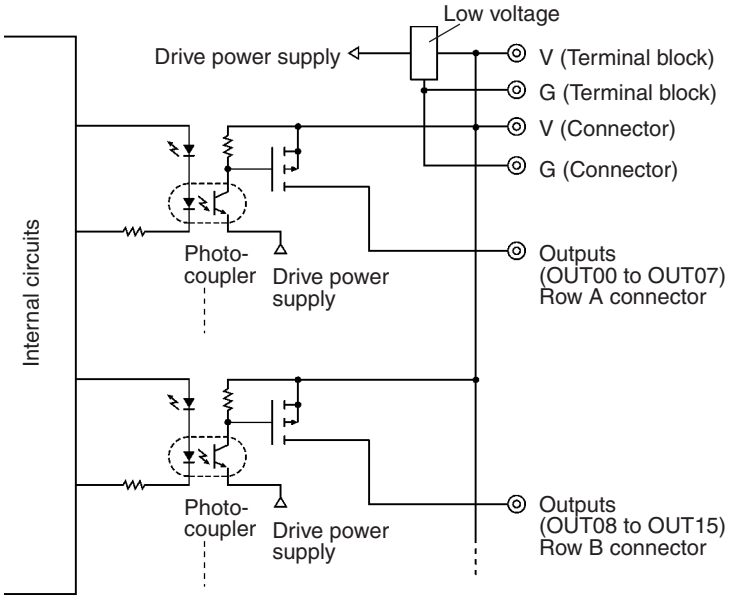


### Terminal Arrangement

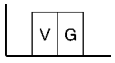


### Connector Pin Arrangement

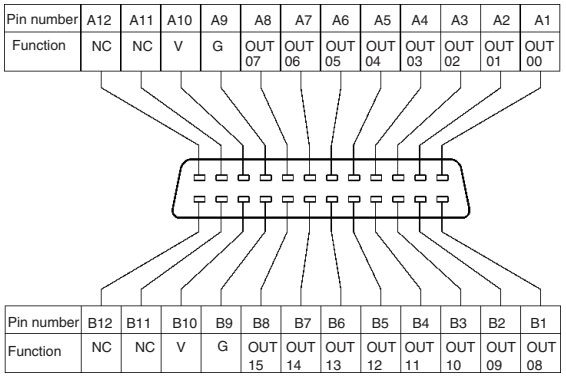

| Pin number | A12 | A11 | A10 | A9 | A8 | A7 | A6 | A5 | A4 | A3 | A2 | A1 |
|---|---|---|---|---|---|---|---|---|---|---|---|---|
| Function | NC | NC | V | G | OUT 07 | OUT 06 | OUT 05 | OUT 04 | OUT 03 | OUT 02 | OUT 01 | OUT 00 |

| Pin number | B12 | B11 | B10 | B9 | B8 | B7 | B6 | B5 | B4 | B3 | B2 | B1 |
|---|---|---|---|---|---|---|---|---|---|---|---|---|
| Function | NC | NC | V | G | OUT 15 | OUT 14 | OUT 13 | OUT 12 | OUT 11 | OUT 10 | OUT 09 | OUT 08 |

### Wiring

Attach a FUJITSU connector to the Transistor Output Unit and connect it to external devices.

**Applicable Connectors**

Three types of connectors can be attached to the cable, depending on the assembly method. When creating your own cables, use one of the following connectors.

| Manufacturer | Model number | Remarks |
|---|---|---|
| FUJITSU | FCN361J024-AU | Soldered |
| | FCN363J024-AU | Crimp |
| | FCN367J024-AU/F | Pressure-welded |

**Connector Cables**

When a Transistor Output Unit (connector) is to be connected to an OMRON I/O Block or a Connector-Terminal Block Conversion Unit, use the cables (sold separately) listed in the following table.

| Manufacturer | Model number | Corresponding device |
|---|---|---|
| OMRON | XW2Z-□□□A | Connector-Terminal Block Conversion Unit<br>XW2B-20G4<br>XW2B-20G5 |
| | G79-□□□C | I/O Block<br>G7TC-OC16-1<br>G70D-SOC16-1<br>G70D-FOM16-1<br>G70A-ZOC16-4<br>M7F |

**Note** V terminals and G terminals are internally connected. When the I/O power is being supplied, the power can be supplied to the output devices from the V and G connectors. Current supplied in this way, however, must be less than 2 A. If, instead of using the V and G connectors, the power supply is wired to the terminal block as shown in the following diagram, the current supplied must be less than 2.5 A.

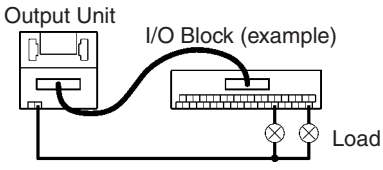


**Dimensions**

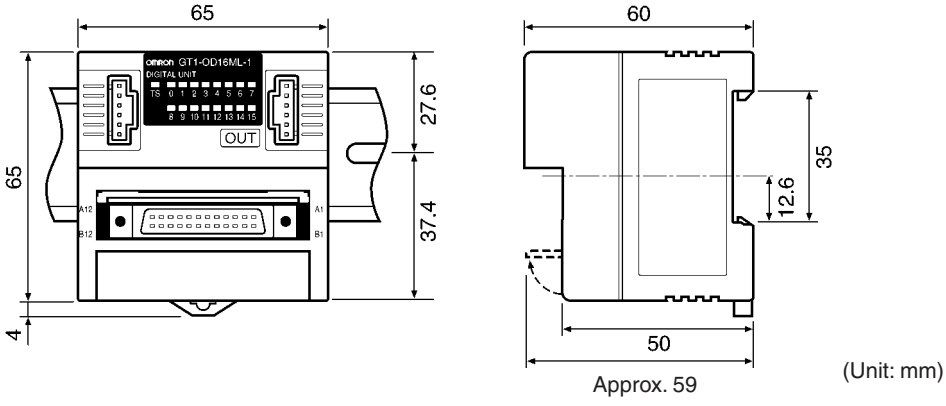


**Note** The vertical center of the Unit is 4.9 mm lower than the center of the DIN track. The Unit therefore extends downward 41.4 mm (including the mounting hook) from the DIN track center.

## 4-4-7 GT1-OD16DS Transistor Output Unit with Connector (NPN)

### Output Specifications

| Item | Specifications |
|---|---|
| Number of outputs | 16 points |
| Current per common | 2.5 A max. |

### Components

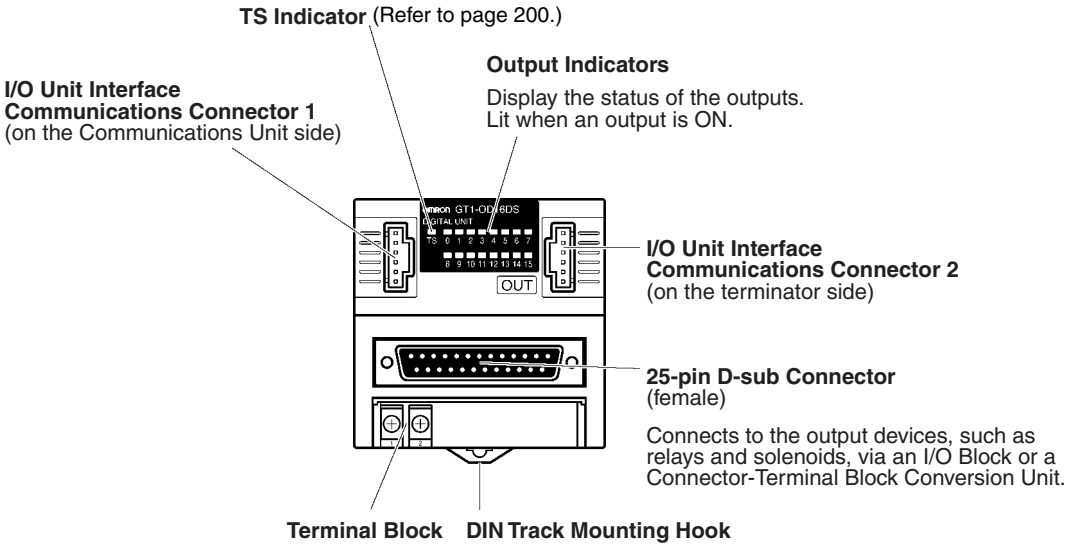


### Internal Circuits

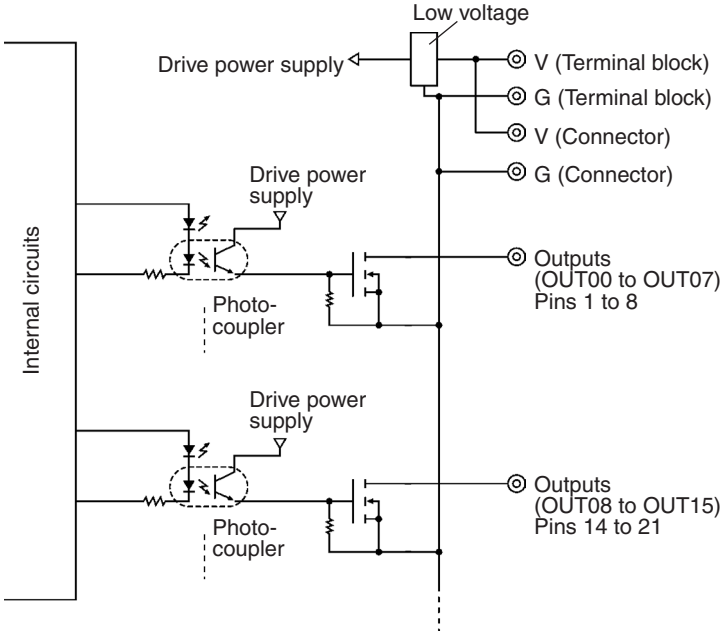


### Terminal Arrangement

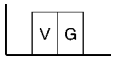

### Connector Pin Arrangement

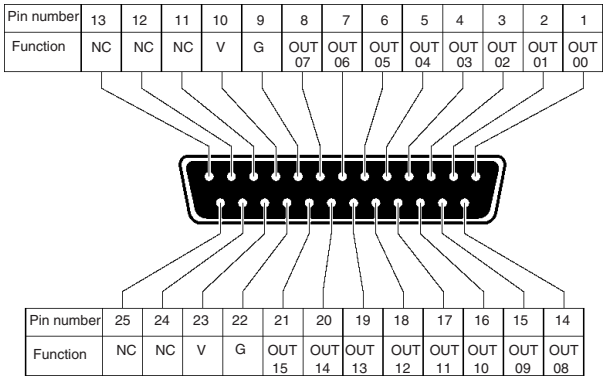


### Wiring

Attach a 25-pin D-sub connector to the Transistor Input Unit and connect it to the external devices.

**Applicable Connectors**

When creating your own cables, use one of the following connectors.

| Manufacturer | Model number | Remarks |
|---|---|---|
| OMRON | XW2S-2513 | Hood |
| | XW2A-2501 | Plug |

**Note** V terminals and G terminals are internally connected. When the I/O power is being supplied, the power can be supplied to the output devices from the V and G connectors. Current supplied in this way, however, must be less than 2.5 A.

### Dimensions

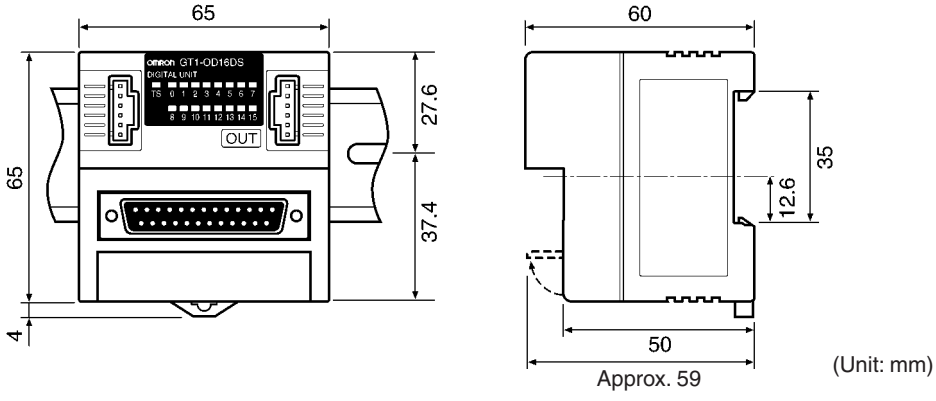


**Note** The vertical center of the Unit is 4.9 mm lower than the center of the DIN track. The Unit therefore extends downward 41.4 mm (including the mounting hook) from the DIN track center.

## 4-4-8 GT1-OD16DS-1 Transistor Output Unit with Connector (PNP)

### Output Specifications

| Item | Specifications |
|---|---|
| Number of outputs | 16 points |
| Current per common | 2.5 A max. |

### Components

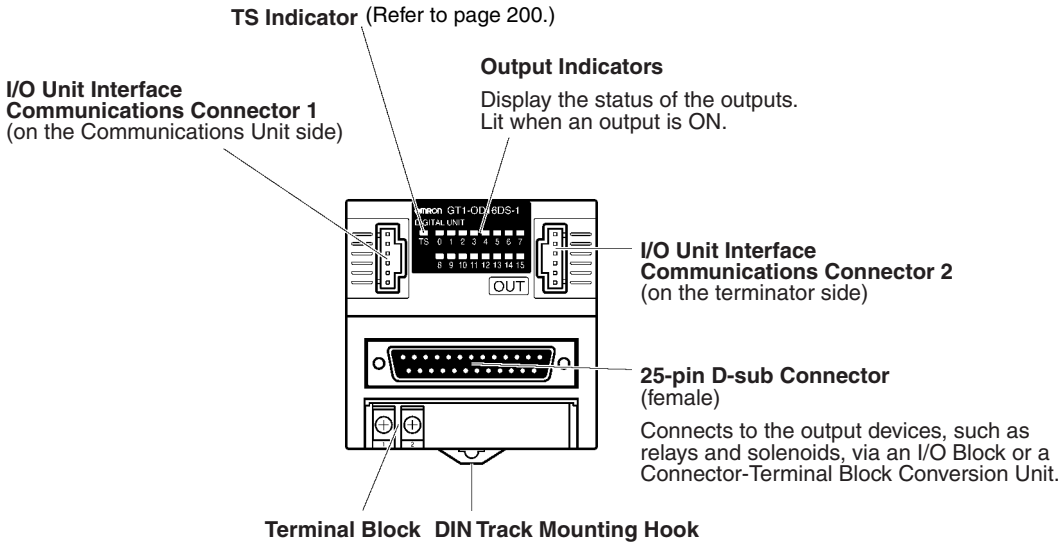


### Internal Circuits

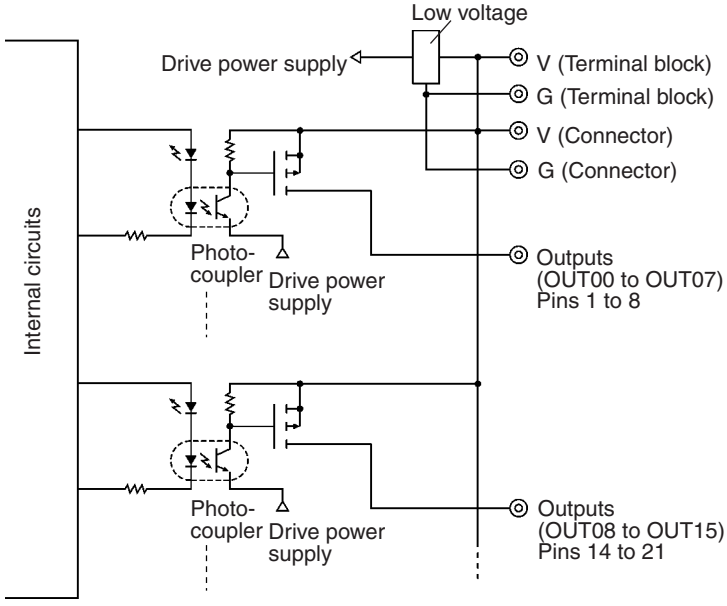


### Terminal Arrangement

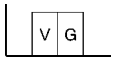

### Connector Pin Arrangement

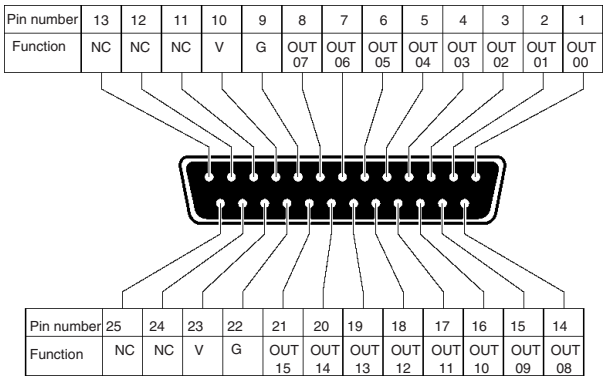


### Wiring

Attach a 25-pin D-sub connector to the Transistor Output Unit and connect it to external devices.

**Applicable Connectors**

When creating your own cables, use one of the following connectors.

| Manufacturer | Model number | Remarks |
|---|---|---|
| OMRON | XW2S-2513 | Hood |
| | XW2A-2501 | Plug |

**Note** V terminals and G terminals are internally connected. When the I/O power is being supplied, the power can be supplied to the output devices from the V and G connectors. Current supplied in this way, however, must be less than 2.5 A.

### Dimensions

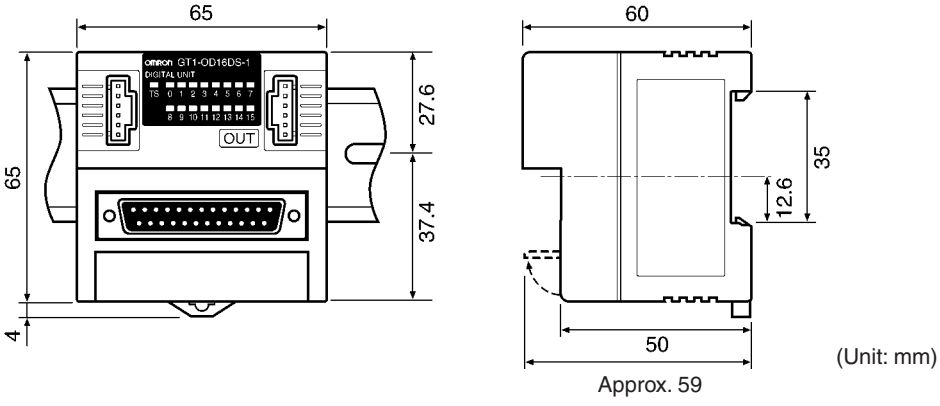


**Note** The vertical center of the Unit is 4.9 mm lower than the center of the DIN track. The Unit therefore extends downward 41.4 mm (including the mounting hook) from the DIN track center.

## 4-4-9 GT1-OD32ML Transistor Output Unit with High-density Connector (NPN)

### Output Specifications

| Item | Specifications |
|---|---|
| Number of outputs | 32 points |
| Current per common | With connectors: 2 A max.<br>With terminal board: 4 A max. |

### Components

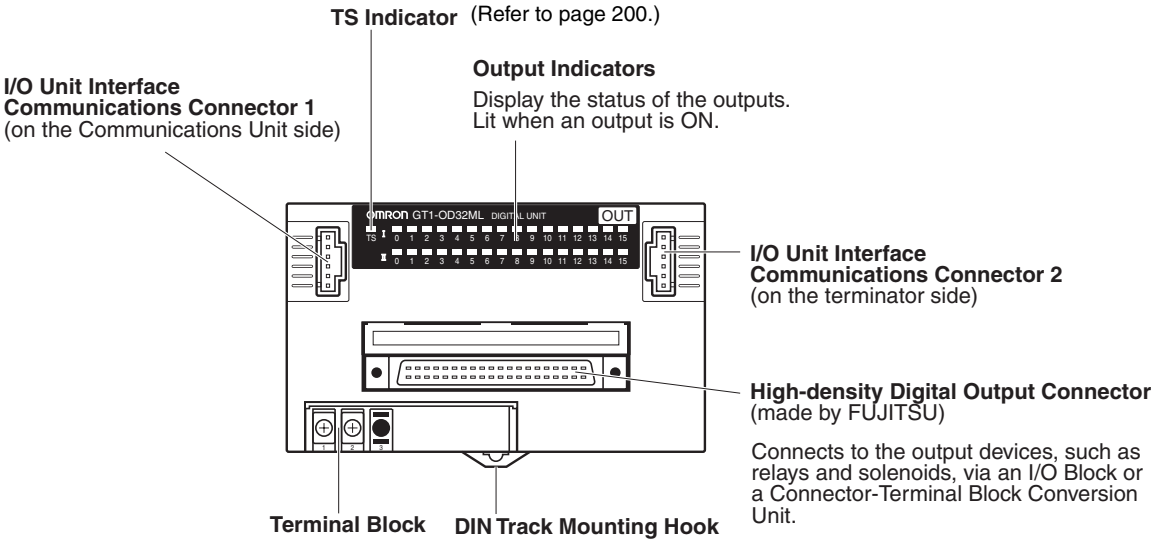


### Internal Circuits

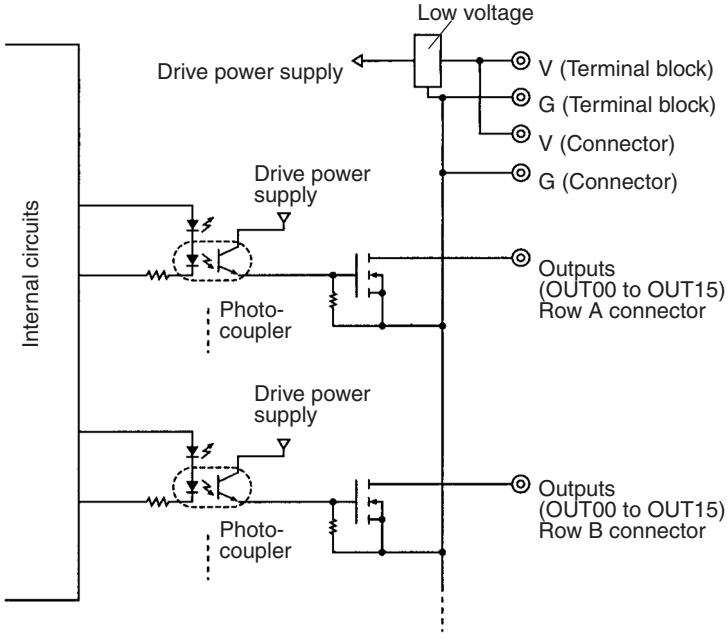


### Terminal Arrangement

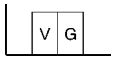

### Connector Pin Arrangement

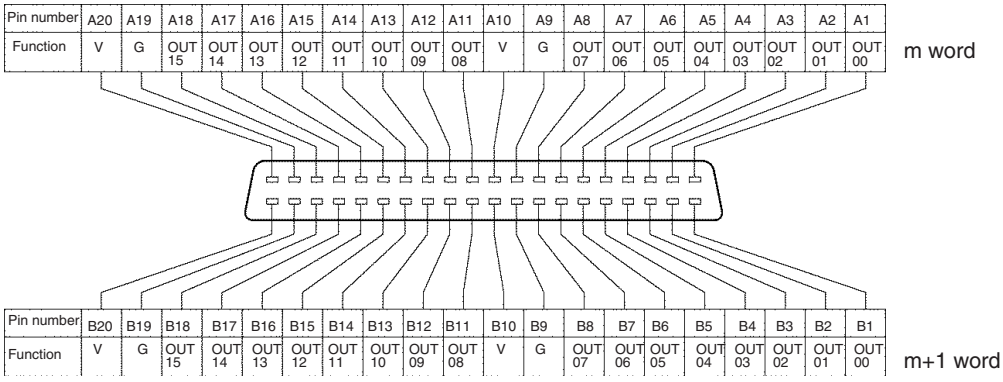


**Wiring**

Attach a FUJITSU connector to the Transistor Output Unit and connect it to external devices.

#### Applicable Connectors

Three types of connectors can be attached to the cable, depending on the assembly method. When creating your own cables, use one of the following connectors.

| Manufacturer | Model number | Remarks |
|---|---|---|
| FUJITSU | FCN361J040-AU | Soldered |
| | FCN363J040-AU | Crimp |
| | FCN367J040-AU/F | Pressure-welded |

#### Connector Cables

When a Transistor Output Unit (high-density connector) is to be connected to an OMRON I/O Block or a Connector-Terminal Block Conversion Unit, use the cables (sold separately) listed in the following table.

| Manufacturer | Model number | Corresponding device |
|---|---|---|
| OMRON | XW2Z-□□□B | Connector-Terminal Block Conversion Unit<br>XW2B-40G4<br>XW2B-40G5 |
| | G79-O□C-□ | I/O Block<br>G7TC-OC16, G7TC-OC08<br>G70D-SOC16, G70D-FOM16<br>G70D-VSOC16, G70A-ZOC16-3<br>M7F |

**Note** V terminals and G terminals are internally connected. When the I/O power is being supplied, the power can be supplied to the output devices from the V and G connectors. Current supplied in this way, however, must be less than 2 A. If, instead of using the V and G connectors, the power supply is wired to the terminal block as shown in the following diagram, the current supplied must be less than 4 A.

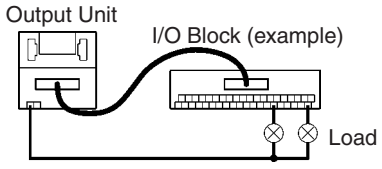

### Dimensions

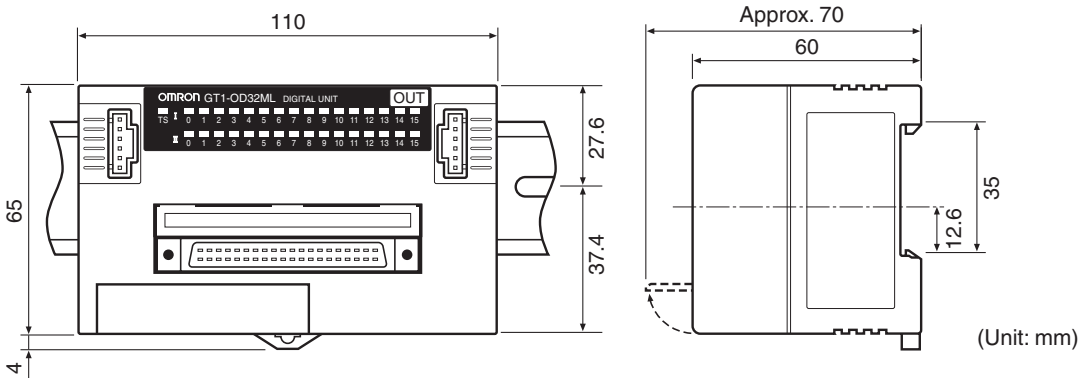


**Note** The vertical center of the Unit is 4.9 mm lower than the center of the DIN track. The Unit therefore extends downward 41.4 mm (including the mounting hook) from the DIN track center.

## 4-4-10 GT1-OD32ML-1 Transistor Output Unit with High-density Connector (PNP)

### Output Specifications

| Item | Specifications |
|---|---|
| Number of outputs | 32 points |
| Current per common | With connectors: 2 A max.<br>With terminal block: 4 A max. |

### Components

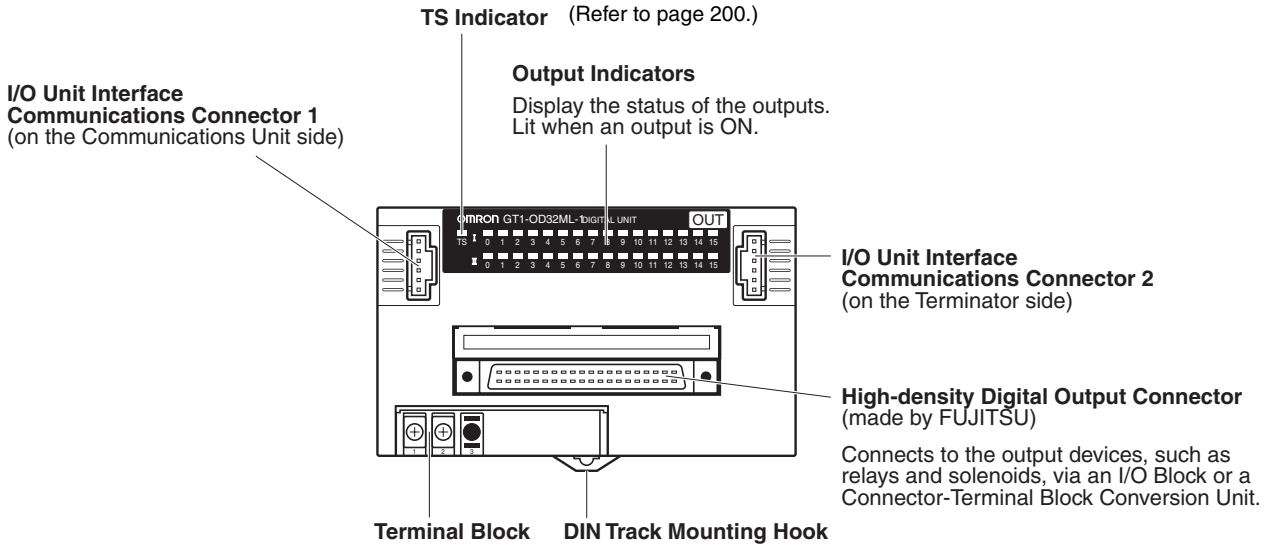

### Internal Circuits

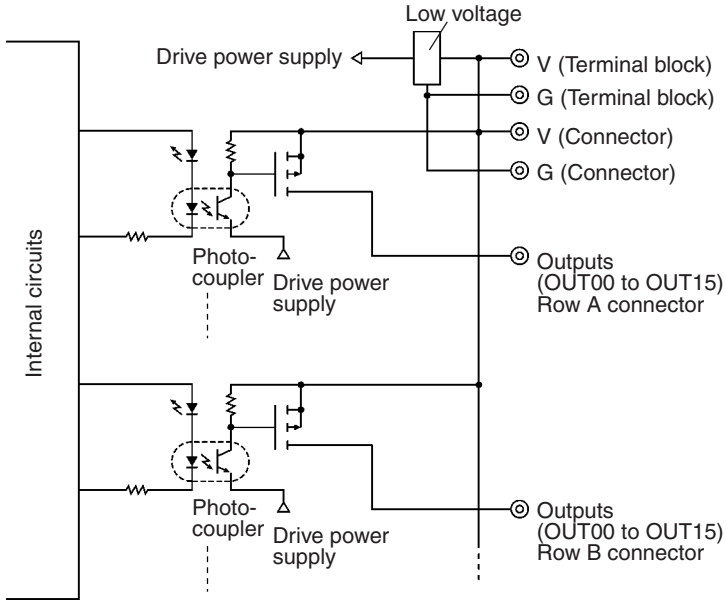


### Terminal Arrangement

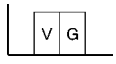


### Connector Pin Arrangement

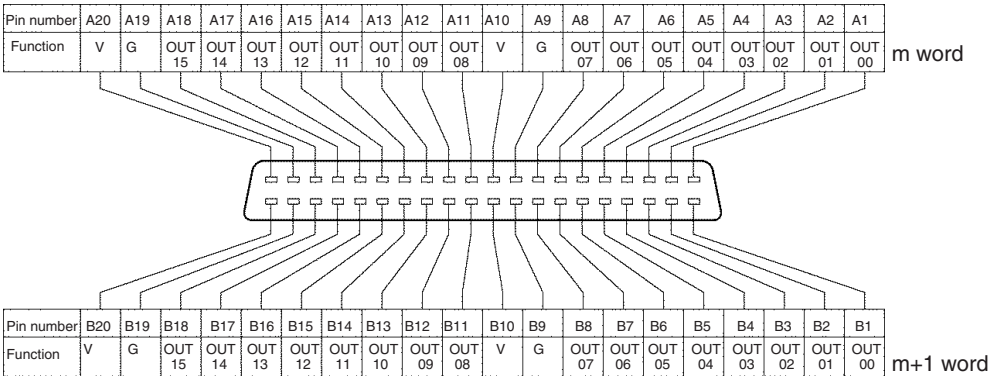


### Wiring

Attach a FUJITSU connector to the Transistor Output Unit and connect it to external devices.

**Applicable Connectors**

Three types of connectors can be attached to the cable, depending on the assembly method. When creating your own cables, use one of the following connectors.

| Manufacturer | Model number | Remarks |
|---|---|---|
| FUJITSU | FCN361J040-AU | Soldered |
| | FCN363J040-AU | Crimp |
| | FCN367J040-AU/F | Pressure-welded |

**Connector Cables**

When a Transistor Output Unit (high-density connector) is to be connected to an OMRON I/O Block or a Connector-Terminal Block Conversion Unit, use the cables (sold separately) listed in the following table.

| Manufacturer | Model number | Corresponding device |
|---|---|---|
| OMRON | XW2Z-□□□B | Connector-Terminal Block Conversion Unit<br>XW2B-40G4<br>XW2B-40G5 |
| | G79-O□C-□ | I/O Block<br>G7TC-OC16-1<br>G70D-SOC16-1<br>G70D-FOM16-1<br>G70D-VSOC16<br>G70A-ZOC16-4<br>M7F |

**Note** V terminals and G terminals are internally connected. When the I/O power is being supplied, the power can be supplied to the output devices from the V and G connectors. Current supplied in this way, however, must be less than 2 A. If, instead of using the V and G connectors, the power supply is wired to the terminal block as shown in the following diagram, the current supplied must be less than 4 A.

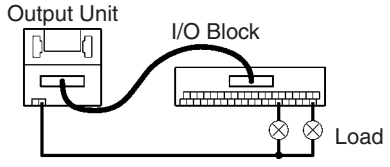


**Dimensions**

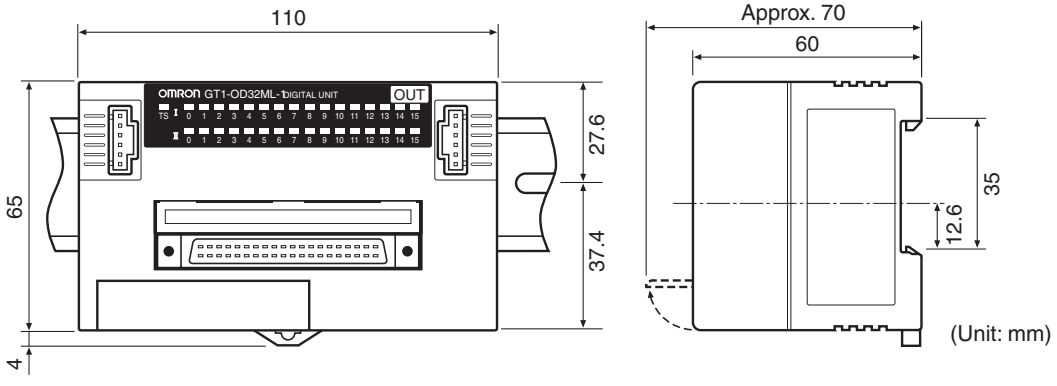


**Note** The vertical center of the Unit is 4.9 mm lower than the center of the DIN track. The Unit therefore extends downward 41.4 mm (including the mounting hook) from the DIN track center.

# 4-5 Relay Output Units

## 4-5-1 GT1-ROP08 Relay Output Unit with Power Relay

### Output Specifications

| Item | Specifications |
|---|---|
| Number of outputs | 8 points |
| Relay | Power Relay (G2R-1-SN) |
| Rated load (resistive load) | 5 A at 250 VAC/5 A at 30 VDC |
| Rated thermal current | 5 A |
| Maximum switching voltage | 250 VAC/125 VDC |
| Maximum switching current | 5 A |
| Minimum permissible load | 100 mA at 5 VDC (P level reference value) |
| Insulation resistance | 1,000 MΩ |

**Reference Data**

For details about the Relay characteristics, refer to G2R-1-SN in the *PCB Relays Catalog (X033)*. The following table shows the life expectancy for the G2R-1-SN Relay.

| Item | Number of operations | Notes |
|---|---|---|
| Mechanical life expectancy | 20,000,000 operations min. | Switching frequency: 18,000 times/hour<br>(At ambient temperature 23°C with rated load) |
| Electrical life expectancy | 100,000 operations min. | Switching frequency: 1,800 times/hour<br>(At ambient temperature 23°C with rated load) |

### Components

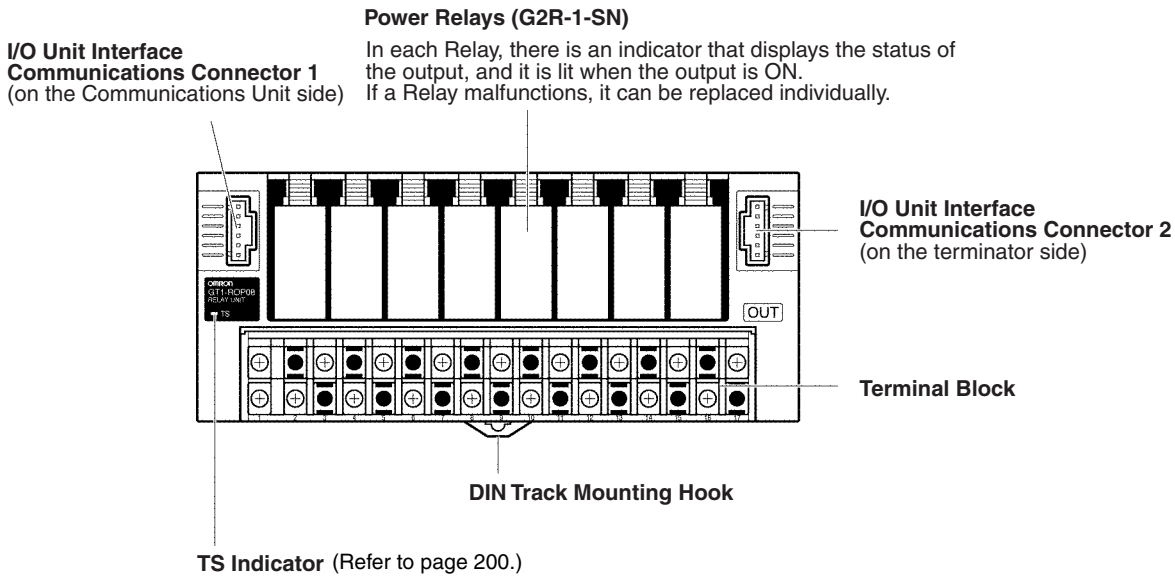


**Note** For details on how to replace Relays, refer to page 206.

### Internal Circuits

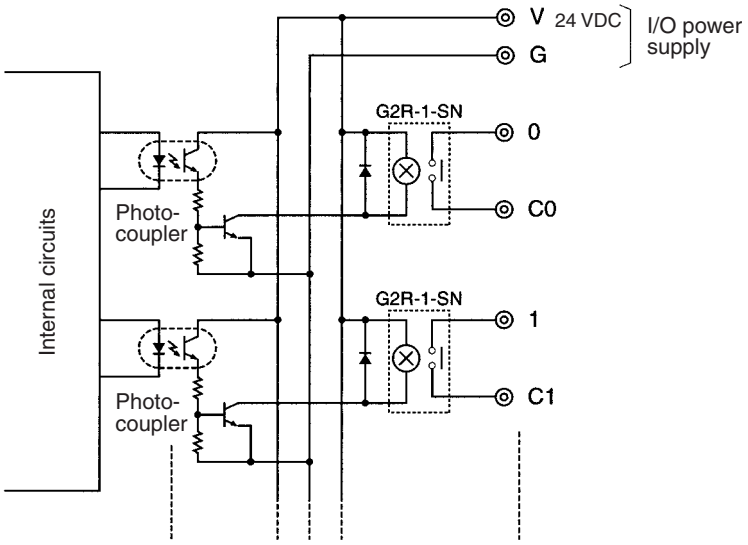


### Terminal Arrangement

| | | | | | | | | | | | | | | | | |
|---|---|---|---|---|---|---|---|---|---|---|---|---|---|---|---|---|
| V | | C0 | | C1 | | C2 | | C3 | | C4 | | C5 | | C6 | | C7 |
| G | 0 | | 1 | | 2 | | 3 | | 4 | | 5 | | 6 | | 7 | |

### Wiring

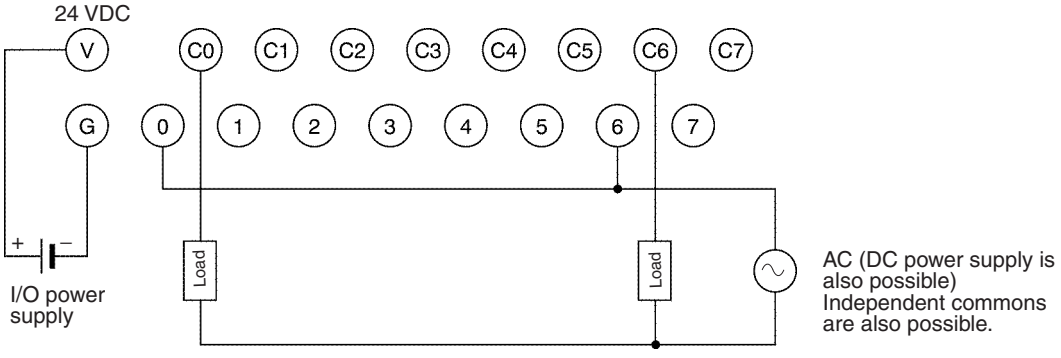

**Dimensions**

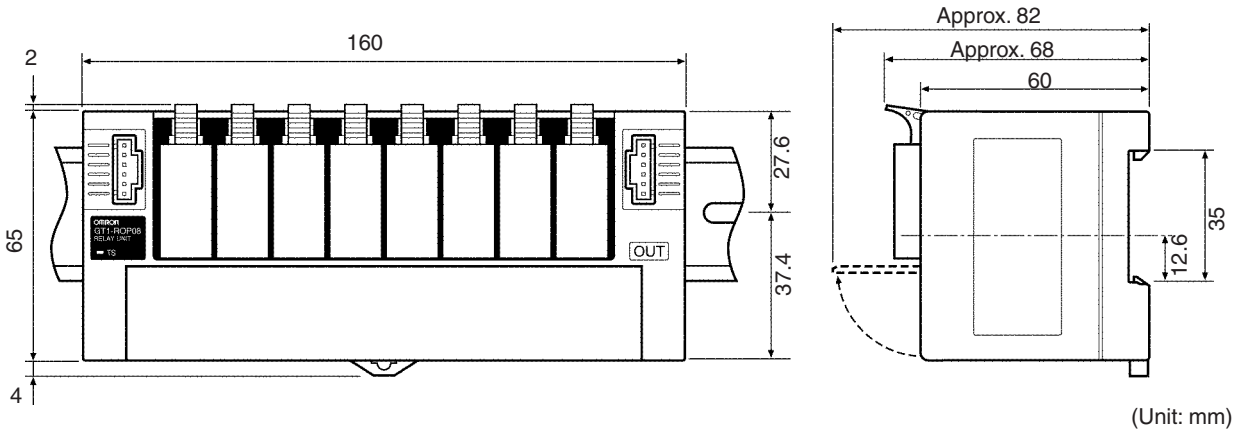


(Unit: mm)

**Note** The vertical center of the Unit is 4.9 mm lower than the center of the DIN track. The Unit therefore extends downward 41.4 mm (including the mounting hook) from the DIN track center.

## 4-5-2 GT1-ROS16 Relay Output Unit with Miniature Relay

**Output Specifications**

| Item | Specifications |
|---|---|
| Number of outputs | 16 points |
| Relay | Miniature Relay (G6D-1A 24 VDC) |
| Rated load (resistive load) | 2 A at 250 VAC/2 A at 30 VDC |
| Rated thermal current | 2 A |
| Maximum switching voltage | 250 VAC/30 VDC |
| Maximum switching current | 2 A |
| Minimum permissible load | 10 mA at 5 VDC (P level reference value) |
| Insulation resistance | 1,000 MΩ |

**Reference Data**

For details about the Relay characteristics, refer to G6D-1A in the *PCB Relays Catalog (X033)*. The following table shows how the number of outputs that can be ON simultaneously varies with the ambient temperature.

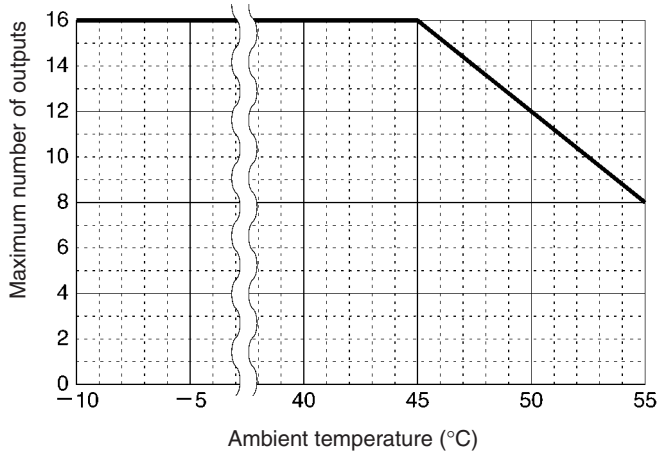

The following table shows the life expectancy for the G6D-1A Relay.

| Item | Number of operations | Notes |
|---|---|---|
| Mechanical life expectancy | 20,000,000 operations min. | Switching frequency: 18,000 times/hour<br>(At ambient temperature 23°C with rated load) |
| Electrical life expectancy | 100,000 operations min. | Switching frequency: 1,800 times/hour<br>(At ambient temperature 23°C with rated load) |

### Components

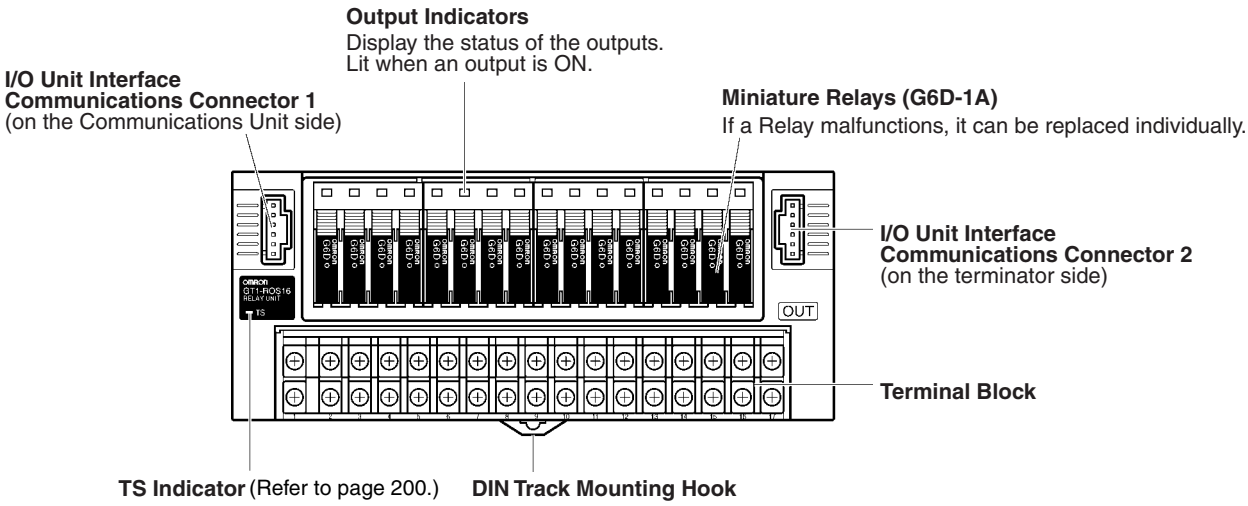


**Note** For details on how to replace Relays, refer to page 206.

### Internal Circuits

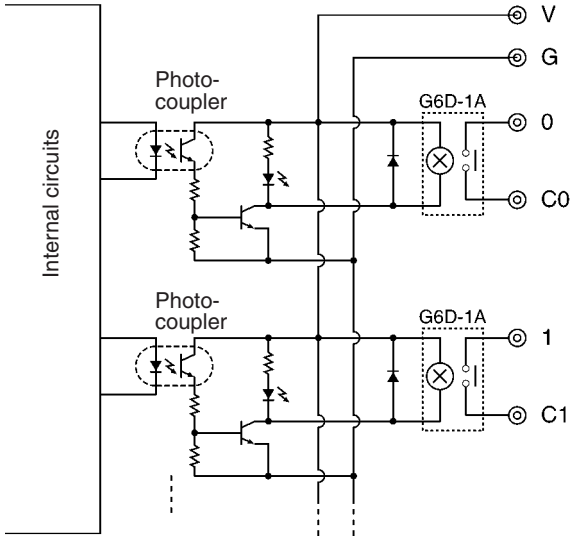

### Terminal Arrangement

| V | C0 | C1 | C2 | C3 | C4 | C5 | C6 | C7 | C8 | C9 | C10 | C11 | C12 | C13 | C14 | C15 |
|---|---|---|---|---|---|---|---|---|---|---|---|---|---|---|---|---|
| G | 0 | 1 | 2 | 3 | 4 | 5 | 6 | 7 | 8 | 9 | 10 | 11 | 12 | 13 | 14 | 15 |

### Wiring

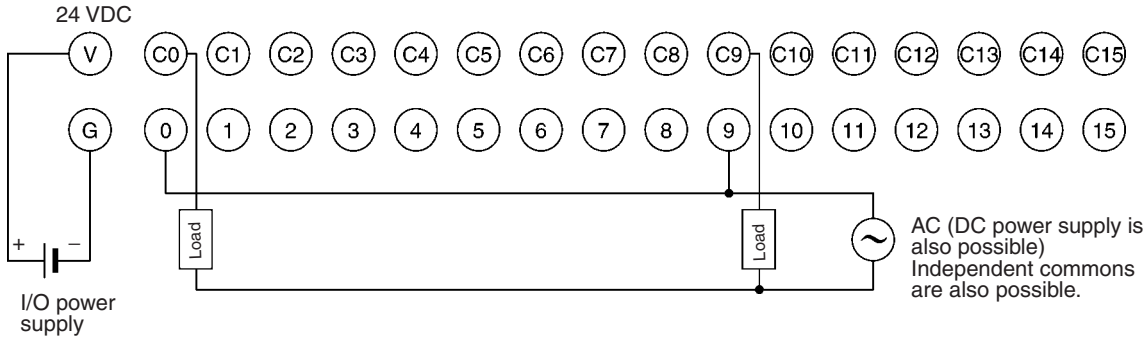


### Mounting

Be sure to mount the Unit in one of the directions shown in the following diagram. If the Unit is not mounted correctly, there is a risk that the service life will be reduced.

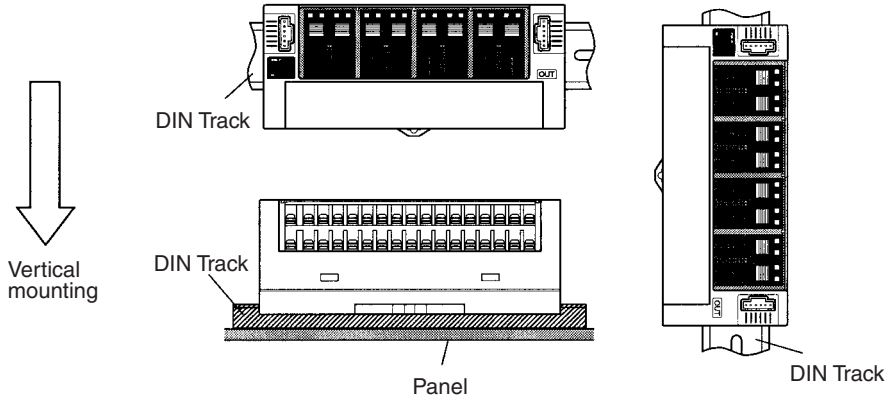

**Dimensions**

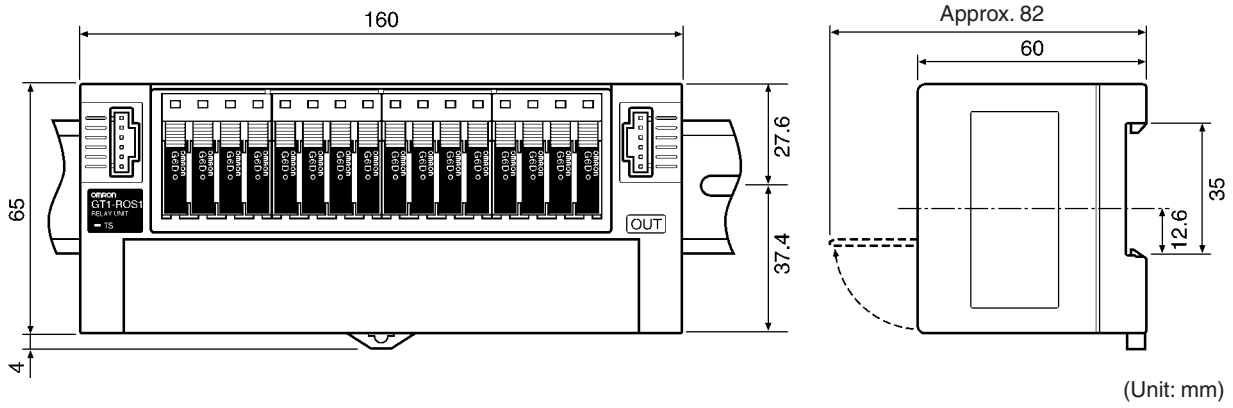


**Note** The vertical center of the Unit is 4.9 mm lower than the center of the DIN track. The Unit therefore extends downward 41.4 mm (including the mounting hook) from the DIN track center.

# SECTION 5
# Special I/O Unit Specifications

This section provides the specifications for Special I/O Units, including the Analog Input Unit, the Analog Output Unit, the Temperature Input Unit, and the Counter Unit. Setting procedures for a Configurator are also provided.


5-1 Analog Input Units . . . . . 98
5-1-1 GT1-AD04 . . . . . 98
5-1-2 GT1-AD08MX . . . . . 106
5-1-3 Settings Using the Configurator . . . . . 114
5-2 Analog Output Units . . . . . 124
5-2-1 GT1-DA04 . . . . . 124
5-2-2 GT1-DA04MX . . . . . 130
5-2-3 Settings Using the Configurator . . . . . 137
5-3 GT1-TS04T and GT1-TS04P Temperature Input Units . . . . . 148
5-3-1 Specifications . . . . . 148
5-3-2 Settings Using the Configurator . . . . . 154
5-4 GT1-CT01 Counter Unit . . . . . 172

# 5-1 Analog Input Units

## 5-1-1 GT1-AD04

**General Specifications**

| Item | | Specification |
|---|---|---|
| I/O connections | | Terminal block (M3) |
| Number of inputs | | 4 points (Master Unit uses 4 input words.) |
| Internal power supply | Voltage range | 20.4 to 26.4 VDC (24 VDC $^{+10\%}/_{-15\%}$) |
| | Current consumption in Unit (inrush current) | 100 mA max.<br>(inrush current 20 A max., pulse width 1 ms max.) |
| Current consumption (I/O Unit interface) | | 50 mA max. |
| Noise immunity | | ±2000 V<br>(IEC61000-4-4 via fast transient noise simulator) |
| Vibration resistance | | 10 to 150 Hz, 1.0-mm double amplitude or 70 m/s$^2$ |
| Shock resistance | | 200 m/s$^2$ |
| Ambient temperature | | –10°C to 55°C |
| Ambient humidity | | 25% to 85% (with no condensation) |
| Operating atmosphere | | No corrosive gases |
| Storage temperature | | –25°C to 65°C |
| Safety standards | | UL508, CSA22.2 |
| EMC directives | | EN50081-2, EN50082-2 |
| Mounting | | DIN 35-mm track |
| Weight | | Approx. 220 g |

**Characteristics**

| Item | | Specification | |
|---|---|---|---|
| | | Voltage inputs | Current inputs |
| Input signal range | | 0 to 5 V, 1 to 5 V, 0 to 10 V, or –10 to 10 V | 0 to 20 mA or 4 to 20 mA |
| Max. signal input | | ±15 V | ±30 mA |
| Input impedance | | 1 MΩ min. | Approx. 250 Ω |
| Resolution | | 1/6000 (FS) | |
| Accuracy | 25°C | ±0.3% FS | ±0.4% FS |
| | –10°C to 55°C | ±0.6% FS | ±0.8% FS |
| Conversion time | | With 4 inputs: 4 ms/4 points | |
| Converted output data (Binary) | | Binary (4-digit hexadecimal)<br>–10- to 10-V range: F448 to 0 to 0BB8 full scale<br>Other signal ranges: 0000 to 1770 full scale | |
| Averaging function | | Settable (via DIP switch) | |
| Open circuit detection | | Provided (with a range of 1 to 5 V or 4 to 20 mA) | |
| Dielectric strength | | 500 VAC; detected current 1 mA (between communications section and analog input, and between internal power supply and analog input) | |
| Isolation method | | Photocoupler insulation (between communications part and analog input)<br>(no insulation between analog inputs) | |

### Components

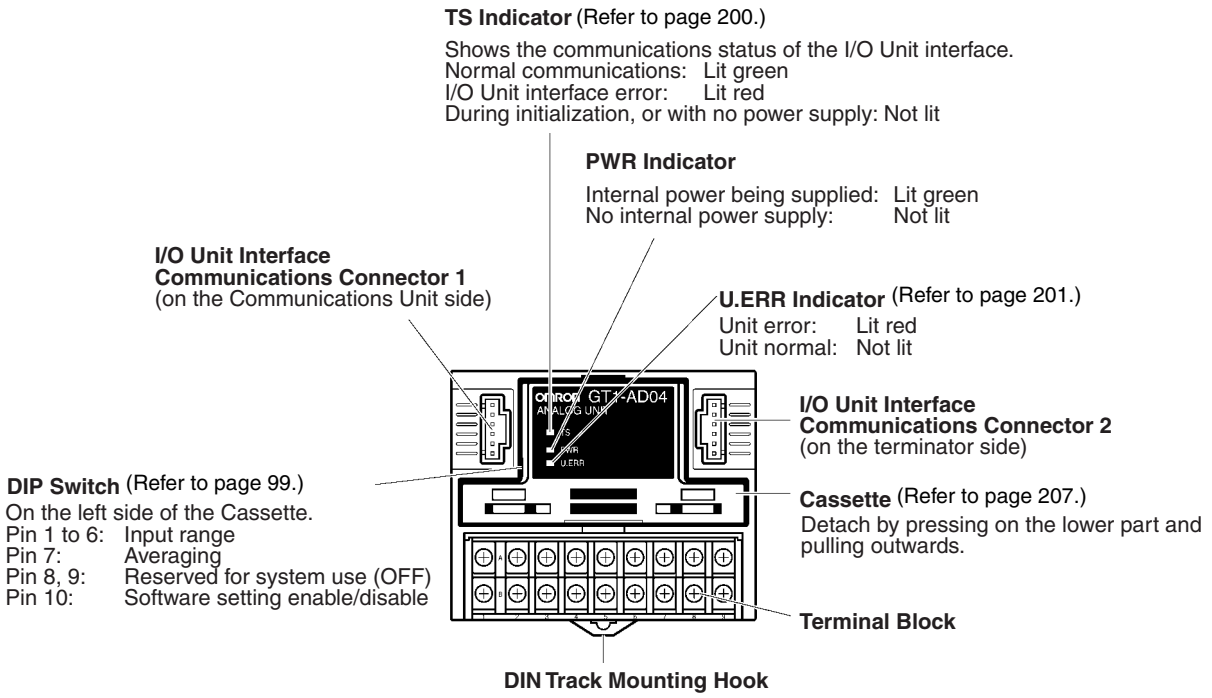


### DIP Switch Settings

The DIP switch is on the left side of the Cassette of the Analog Input Unit (GT1-AD04). Detach the Cassette from the Unit in order to make DIP switch settings. The following diagram shows the functions of the DIP switch.

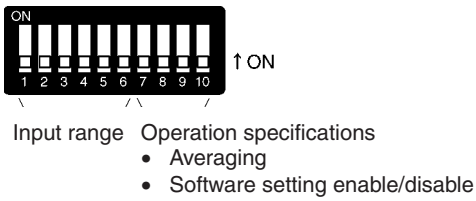


The following table summarizes the DIP switch settings. (All pins are factory-set to OFF.)

| Pin(s) | Function | Settings | Meaning |
|---|---|---|---|
| 1 to 6 | Input range | "Input Range Settings" (see below) | |
| 7 | Averaging (see page 103) | OFF | No averaging is performed. (factory-set) |
| | | ON | Averaging is performed. |
| 8, 9 | Reserved for system use | OFF | Must be set to OFF. (factory-set) |
| 10 | Software setting enable/disable | OFF | Set the input range with pins 1 to 6. (factory-set) |
| | | ON | Input range setting using the Configurator is enabled. (see note 1) |

**Note**

1. When setting the input range using a DeviceNet Configurator, use version 1.11 or later. (If pin 10 is ON, and a setting is made using the Configurator, the input ranges will all be 0 to 5 V.)
2. Before detaching or attaching the Cassette or making DIP switch settings, ensure that the power supply to the I/O Unit (including power supply to I/O Unit interface) is OFF.

**Input Range Settings**

As shown in the following table, the DIP switch input range settings are for two inputs each.

| Pin 1 | Pin 2 | Pin 3 | Input range for inputs 0 and 1 |
|---|---|---|---|
| Pin 4 | Pin 5 | Pin 6 | Input range for inputs 2 and 3 |
| OFF | OFF | OFF | 0 to 5 V |
| ON | OFF | OFF | 1 to 5 V |
| OFF | ON | OFF | 0 to 10 V |
| ON | ON | OFF | –10 to 10 V |
| OFF | OFF | ON | 4 to 20 mA |
| ON | OFF | ON | 0 to 20 mA |
| Other than the above | | | Cannot be set |

**Note** If input range setting is performed using the Configurator (version 1.11 or later), it is possible to make the setting for each point.

### Internal Circuits

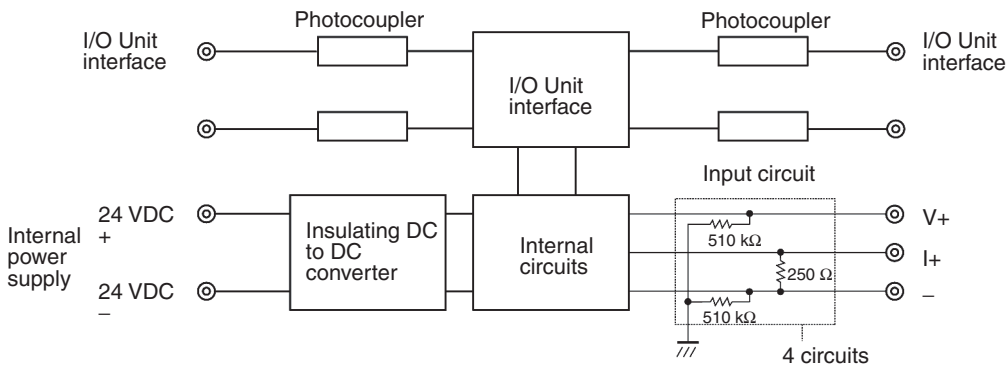


### Terminal Arrangement

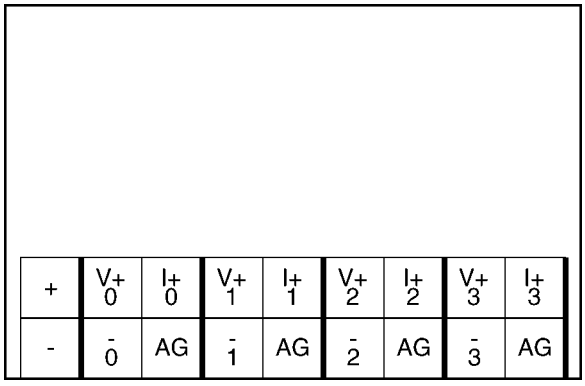

### Wiring

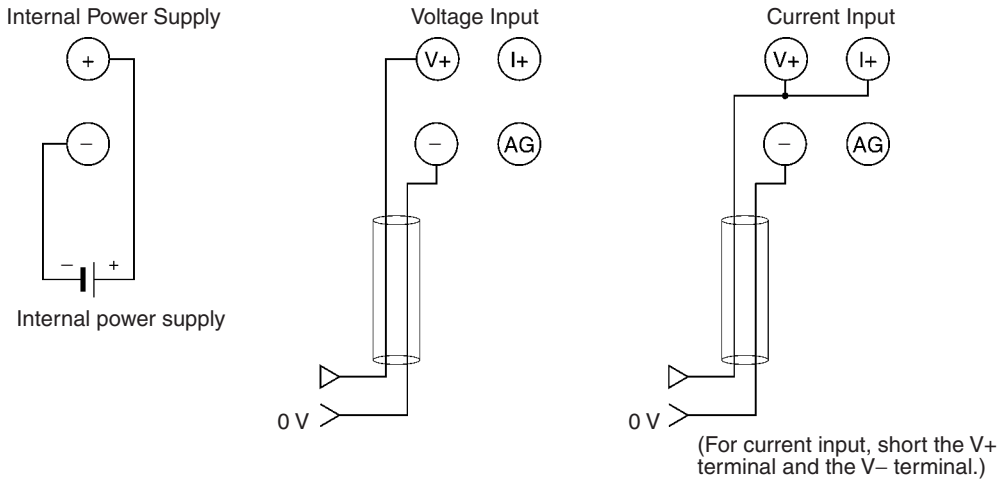


### Input Ranges and Converted Data

The Analog Input Unit converts analog input data to digital values. The digital values depend on the input signal ranges, as shown in the following diagrams. When the input exceeds the specified range, the AD conversion data will be fixed at either the lower limit or upper limit.

**–10 to 10 V**

The –10- to 10-V range corresponds to the hexadecimal values F448 to 0BB8 (–3000 to 3000). The entire data range is F31C to 0CE4 (–3300 to 3300). A negative voltage is expressed as a two's complement (16 bits). If the line is disconnected, the data will be the same as an input of 0 V (0000 Hex).

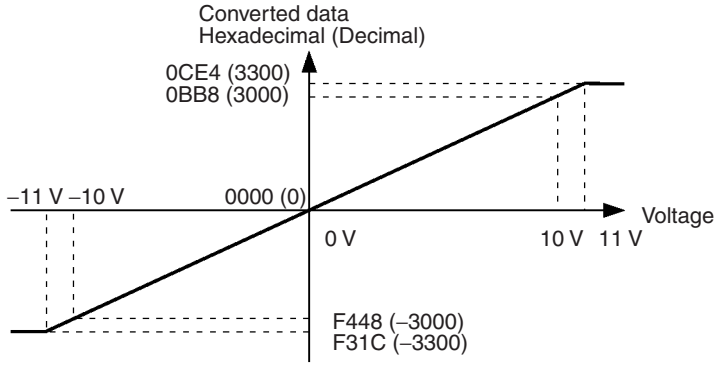


**0 to 10 V**

The 0- to 10-V range corresponds to the hexadecimal values 0000 to 1770 (0 to 6000). The entire data range is FED4 to 189C (–300 to 6300). A negative voltage is expressed as a two's complement (16 bits). If the line is disconnected, the data will be the same as an input of 0 V (0000 Hex).

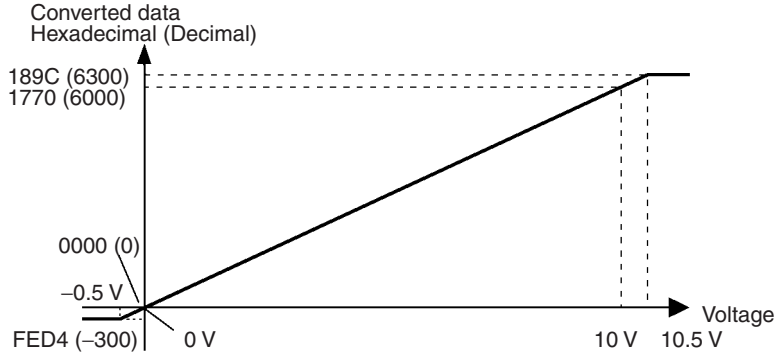

**0 to 5 V**

The 0- to 5-V range corresponds to the hexadecimal values 0000 to 1770 (0 to 6000). The entire data range is FED4 to 189C (–300 to 6300). A negative voltage is expressed as a two's complement (16 bits). If the line is disconnected, the data will be the same as an input of 0 V (0000 Hex).

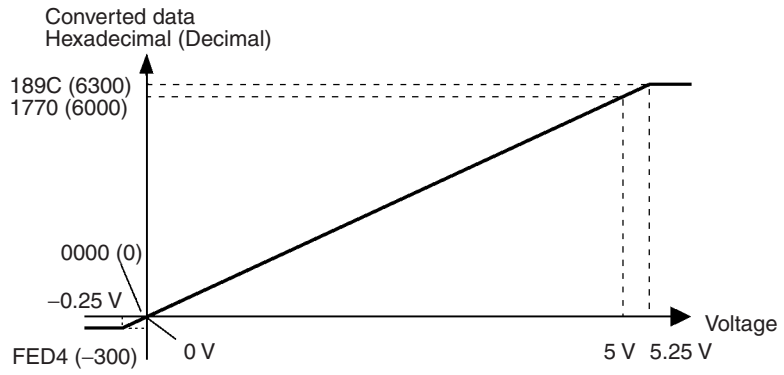


**1 to 5 V**

The 1- to 5-V range corresponds to the hexadecimal values 0000 to 1770 (0 to 6000). The entire data range is FED4 to 189C (–300 to 6300). If the input voltage falls below 0.8 V, the open-circuit detection function will activate and the converted data will be set to 7FFF.

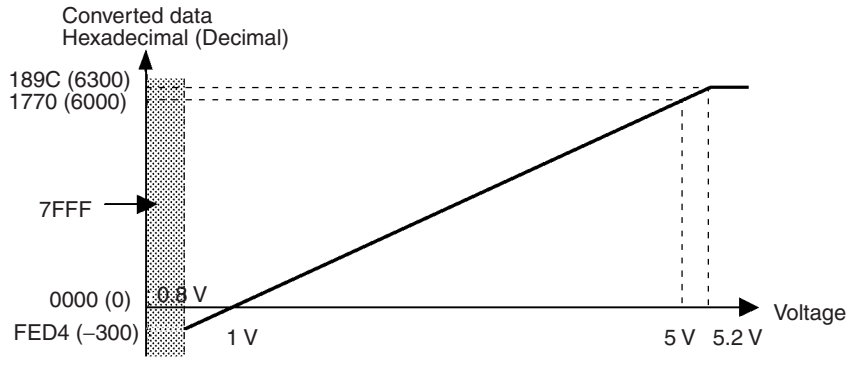


**0 to 20 mA**

The 0- to 20-mA range corresponds to the hexadecimal values 0000 to 1770 (0 to 6000). The entire data range is FED4 to 189C (–300 to 6300). A negative voltage is expressed as a two's complement (16 bits). If the line is disconnected, the data will be the same as an input of 0 mA (0000 Hex).

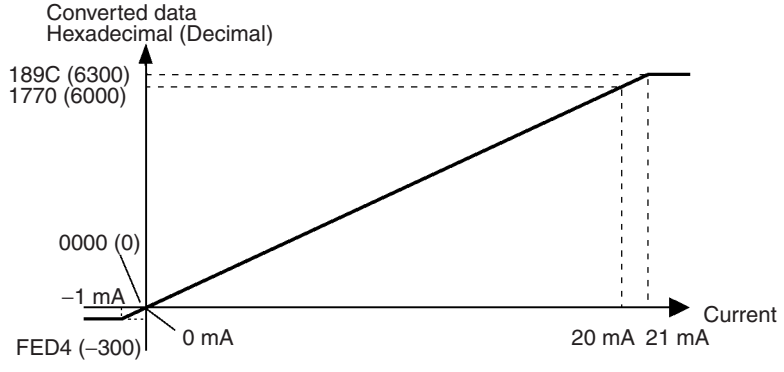

**4 to 20 mA**

The 4- to 20-mA range corresponds to the hexadecimal values 0000 to 1770 (0 to 6000). The entire data range is FED4 to 189C (–300 to 6300). If the input current falls below 3.2 mA, the open-circuit detection function will activate and the converted data will be set to 7FFF.

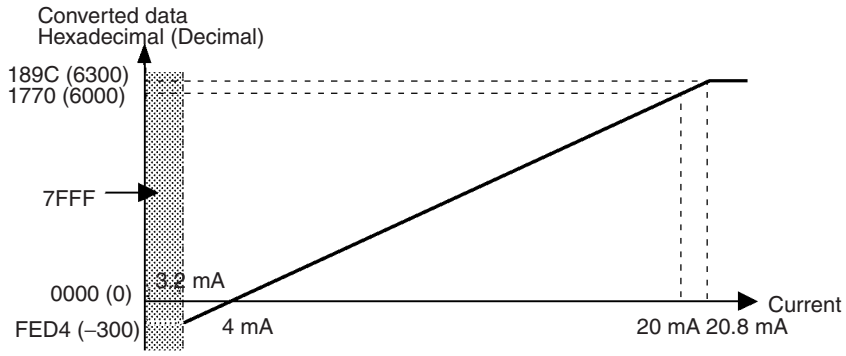


**Averaging Function Setting**

The averaging function can be enabled for all inputs (0 through 3) by turning ON pin 7 of the DIP switch. The averaging function outputs the average (a moving average) of the last eight input values as the converted value. Use this function to smooth inputs that vary like the one in the following diagram.

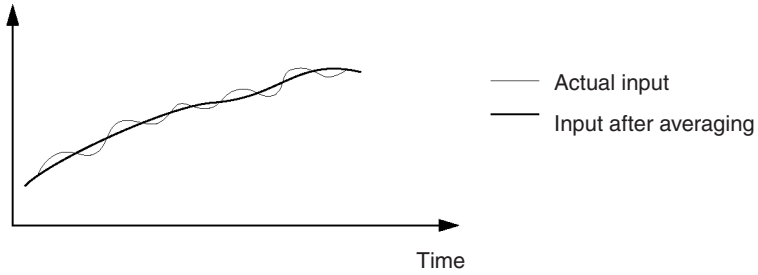


**Note** The time required for refreshing converted data remains one ms/point when the averaging function is enabled. The first communications data after the power is turned ON will be output after averaging eight samples.

**Open-circuit Detection Function**

The open-circuit detection function is activated when the input range is set to 1 to 5 V and the voltage drops below 0.8 V, or when the input range is set to 4 to 20 mA and the current drops below 3.2 mA. When the open-circuit detection function is activated, the converted data will be set to 7FFF.

The open-circuit detection function is enabled or cleared when data is converted. If the input returns to the convertible range, the open-circuit detection is cleared automatically and the output returns to the normal range.

**Common Power Supply for Input Devices**

If an open-circuit occurs when more than one input device is using the same power supply, and voltage input is being supplied, the following situation will occur (this does not apply when current input is being supplied).

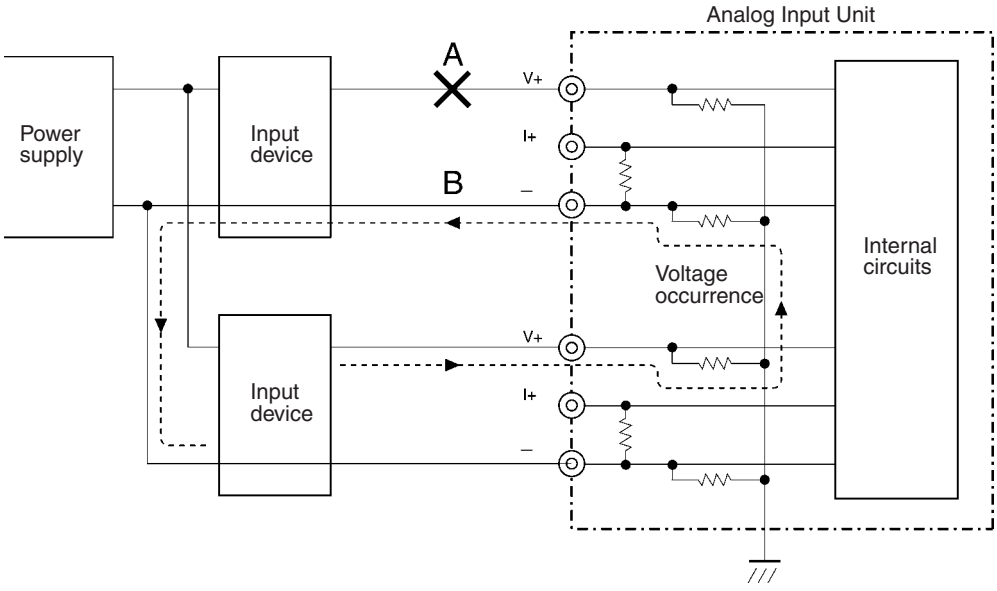


If an open-circuit occurs at A in the above diagram, a sneak circuit will be created in the direction of the arrow, and even though the circuit is open, a voltage will exist. This voltage will be approximately 1/3 to 1/2 of the output of the input devices in the part of the circuit that is not open. (The same will apply if an open circuit occurred at B.) With such a voltage present in the circuit, the open-circuit will not be detected. When voltage input is being supplied, either set up the input devices so that they are not using the same power supply, or use isolators for each input.

**Converted Data**

| | 15 14 13 12 11 10 9 8 7 6 5 4 3 2 1 0 Bit |
|---|---|
| First word | Input 0 converted data |
| First word + 1 | Input 1 converted data |
| First word + 2 | Input 2 converted data |
| First word + 3 | Input 3 converted data |

If the conversion data is a negative number, it is expressed as a two's complement. To obtain an absolute value from this two's complement, the NEG instruction is useful.

**Conversion Time**

The conversion data is refreshed every 4 ms for all 4 points.

**Dimensions**

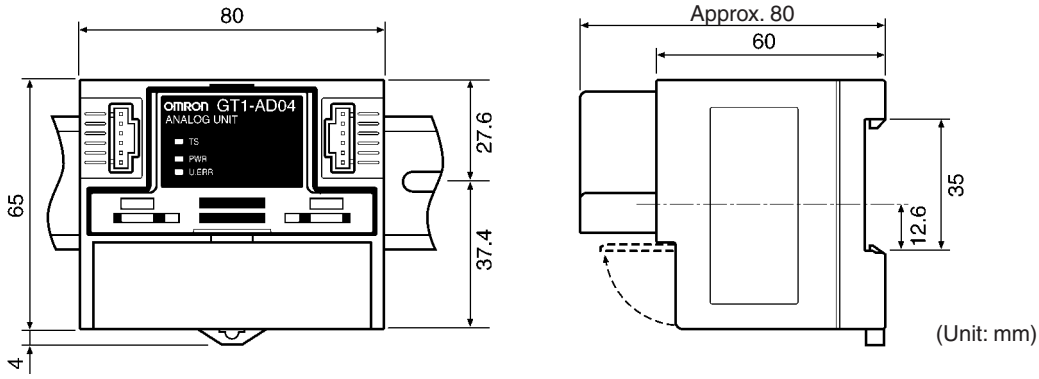


**Note** The vertical center of the Unit is 4.9 mm lower than the center of the DIN track. The Unit therefore extends downward 41.4 mm (including the mounting hook) from the DIN track center.

## 5-1-2 GT1-AD08MX

**General Specifications**

| Item | | Specification |
|---|---|---|
| I/O connections | | Connectors (made by MOLEX) |
| Number of inputs | | Either 8 points or 4 points (set with the DIP switch)<br>(Master Unit uses 8 input words or 4 input words.) |
| Internal power supply | Voltage range | 20.4 to 26.4 VDC (24 VDC $^{+10\%}/_{-15\%}$) |
| | Current consumption in Unit (inrush current) | 100 mA max.<br>(inrush current 30 A max.) |
| Current consumption (I/O Unit interface) | | 50 mA max. |
| Noise immunity | | ±2000 V<br>(IEC61000-4-4 via fast transient noise simulator) |
| Vibration resistance | | 10 to 150 Hz, 1.0-mm double amplitude or 70 m/s$^2$ |
| Shock resistance | | 200 m/s$^2$ |
| Ambient temperature | | –10°C to 55°C |
| Ambient humidity | | 25% to 85% (with no condensation) |
| Operating atmosphere | | No corrosive gases |
| Storage temperature | | –25°C to 65°C |
| Safety standards | | UL508, CSA22.2 |
| EMC directives | | EN50081-2, EN50082-2 |
| Mounting | | DIN 35-mm track |
| Weight | | Approx. 180 g |

**Characteristics**

| Item | | Specification | |
|---|---|---|---|
| | | Voltage inputs | Current inputs |
| Input signal range | | 0 to 5 V, 1 to 5 V, 0 to 10 V, or –10 to 10 V | 0 to 20 mA or 4 to 20 mA |
| Max. signal input | | ±15 V | ±30 mA |
| Input impedance | | 1 MΩ min. | Approx. 250 Ω |
| Resolution | | 1/6000 (FS) | |
| Accuracy | 25°C | ±0.3% FS | ±0.4% FS |
| | –10°C to 55°C | ±0.6% FS | ±0.8% FS |
| Conversion time | | With 8 inputs: 8 ms/8 points<br>With 4 inputs: 4 ms/4 points<br>(Select using the DIP switch.) | |
| Converted output data (Binary) | | Binary (4-digit hexadecimal)<br>–10- to 10-V range: F448 to 0 to 0BB8 full scale<br>Other signal ranges: 0000 to 1770 full scale | |
| Averaging function | | Settable (via DIP switch) | |
| Open circuit detection | | Provided. (with a range of 1 to 5 V or 4 to 20 mA) | |
| Dielectric strength | | 500 VAC; detected current 1 mA (between communications section and analog input, and between internal power supply and analog input) | |
| Isolation method | | Photocoupler insulation (between communications part and analog input)<br>(no insulation between analog inputs) | |

### Components

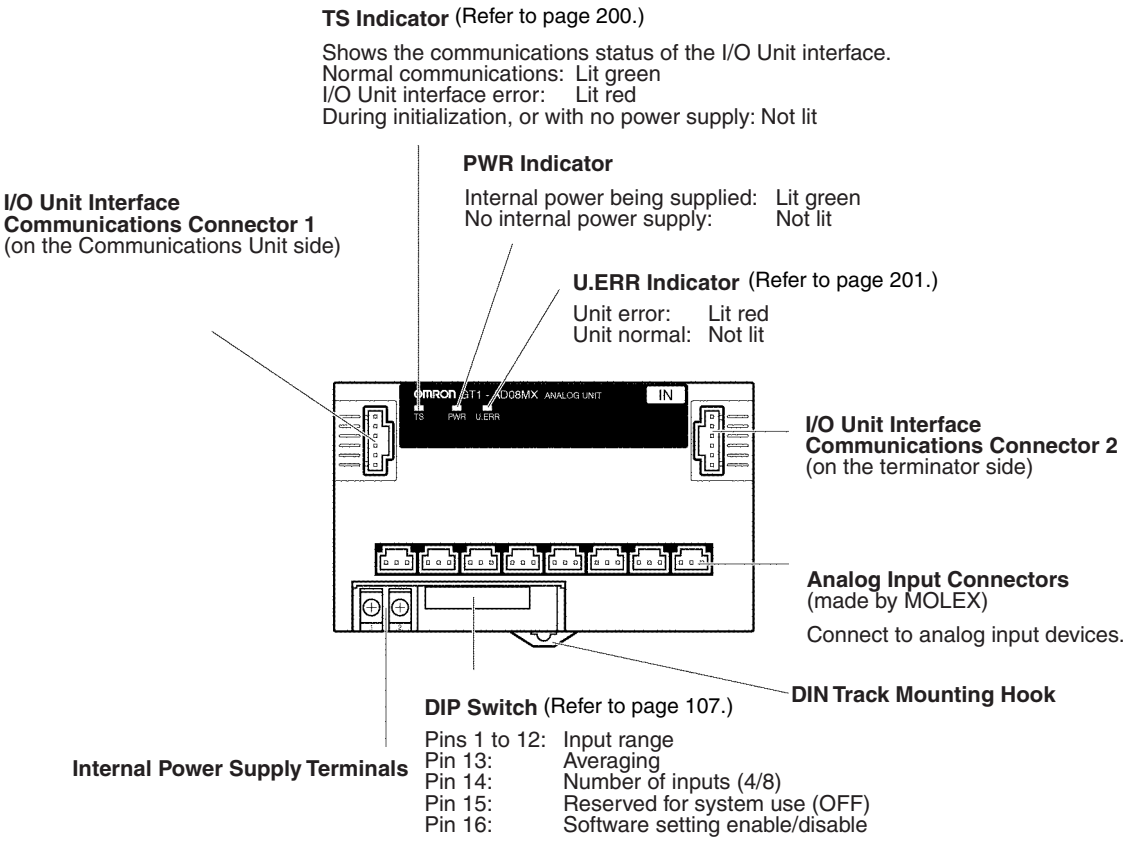


### DIP Switch Settings

The following diagram shows the functions of the DIP switch.

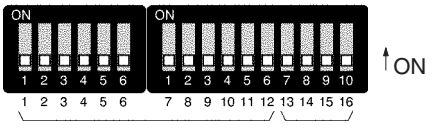


Input range

Operation specifications
- Averaging
- Switching between 4 and 8 inputs.
- Software setting enable/disable

The following table summarizes the DIP switch settings. (All pins are factory-set to OFF.)

| Pin(s) | Function | Settings | Meaning |
|---|---|---|---|
| 1 to 12 | Input range | "Input Range Settings" (see below) | |
| 13 | Averaging (refer to page 111) | OFF | No averaging is performed. (factory-set) |
| | | ON | Averaging is performed. |
| 14 | 8-point/4 inputs switching (refer to page 111) | OFF | 8 inputs (factory-set) |
| | | ON | 4 inputs (inputs 0, 2, 4, and 6 are enabled) |
| 15 | Reserved for system use | OFF | Must be set to OFF. (factory-set) |
| 16 | Software setting enable/disable | OFF | Set the input range with pins 1 to 12. (factory-set) |
| | | ON | Input range setting using the Configurator (see note) is enabled. |

**Note** When setting the input range using a DeviceNet Configurator, use version 1.11 or later. (If pin 16 is ON, and a setting is made using the Configurator, the input ranges will all be 0 to 5 V.)

Make sure the I/O Unit power supply (including the I/O Unit interface power supply) is OFF when setting the DIP switch.

**Input Range Settings**

As shown in the following table, the DIP switch input range settings are for two inputs each.

| Pin 1 | Pin 2 | Pin 3 | Input range for inputs 0 and 1 |
|---|---|---|---|
| Pin 4 | Pin 5 | Pin 6 | Input range for inputs 2 and 3 |
| Pin 7 | Pin 8 | Pin 9 | Input range for inputs 4 and 5 |
| Pin 10 | Pin 11 | Pin 12 | Input range for inputs 6 and 7 |
| OFF | OFF | OFF | 0 to 5 V |
| ON | OFF | OFF | 1 to 5 V |
| OFF | ON | OFF | 0 to 10 V |
| ON | ON | OFF | –10 to 10 V |
| OFF | OFF | ON | 4 to 20 mA |
| ON | OFF | ON | 0 to 20 mA |
| Other than the above | | | Cannot be set |

**Note** If input range setting is performed using the Configurator (version 1.11 or later), it is possible to make the setting for each point.

### Internal Circuits

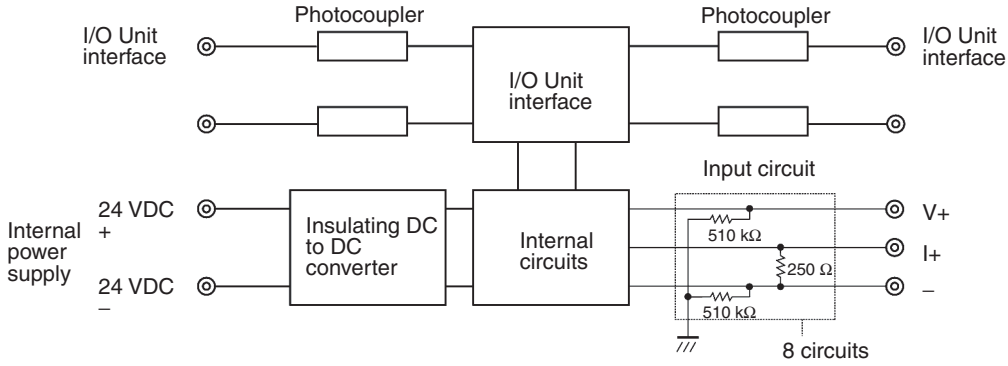


### Terminal/Connector Pin Arrangement

The arrangements of the terminals, the connectors and the connector pins are shown in the following diagram.

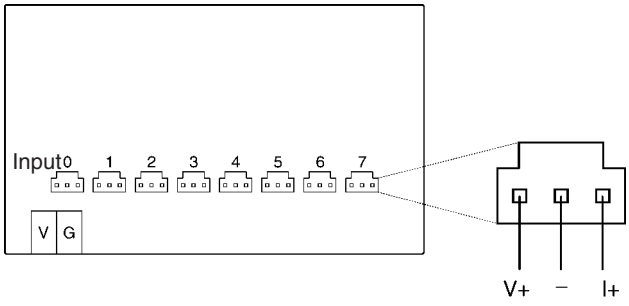


### Wiring

Attach MOLEX connectors to the analog input connectors, and connect the inputs as shown in the following diagram, depending on whether voltage inputs or current inputs are being used.

**Applicable Connectors**

| Manufacturer | Connector | | Model number | Remarks |
|---|---|---|---|---|
| MOLEX | Crimp | Housing | 51030-0330 | --- |
| | | Reeled contacts | 70058-0004 | For AWG#24 to 30 |
| | | | 70058-0022 | For AWG#22 to 24 |
| | | Loose contacts | 70058-0204 | For AWG#24 to 30 |
| | | | 70058-0222 | For AWG#22 to 24 |
| | | Crimping tool | 57036-5000 | For AWG#22 to 26 |
| | | | 57037-5000 | For AWG#24 to 30 |

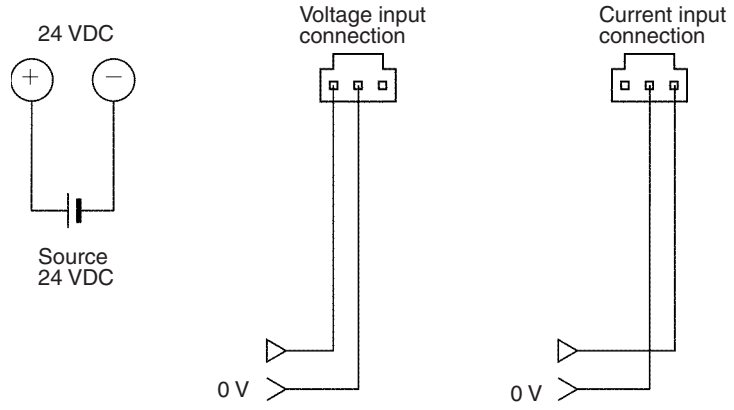


### Input Ranges and Converted Data

The Analog Input Unit converts analog input data to digital values. The digital values depend on the input signal ranges, as shown in the following diagrams. When the input exceeds the specified range, the AD conversion data will be fixed at either the lower limit or upper limit.

**–10 to 10 V**

The –10- to 10-V range corresponds to the hexadecimal values F448 to 0BB8 (–3000 to 3000). The entire data range is F31C to 0CE4 (–3300 to 3300). A negative voltage is expressed as a two's complement (16 bits). If the line is disconnected, the data will be the same as an input of 0 V (0000 Hex).

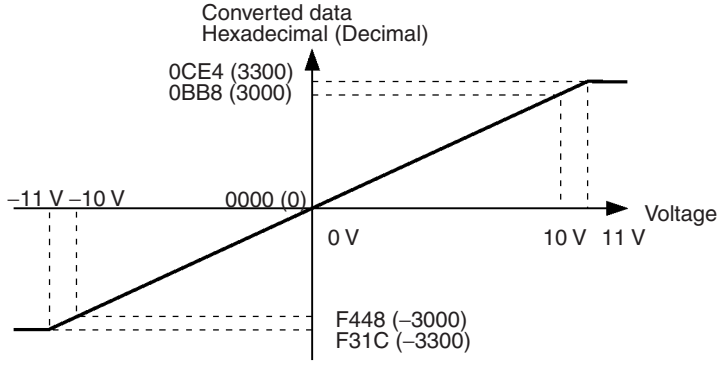


**0 to 10 V**

The 0- to 10-V range corresponds to the hexadecimal values 0000 to 1770 (0 to 6000). The entire data range is FED4 to 189C (–300 to 6300). A negative voltage is expressed as a two's complement (16 bits). If the line is disconnected, the data will be the same as an input of 0 V (0000 Hex).

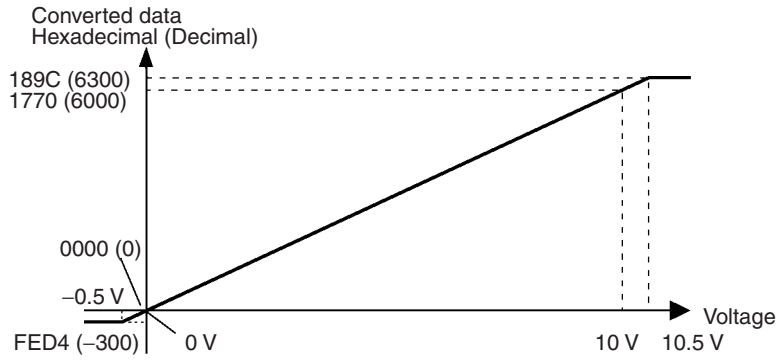


**0 to 5 V**

The 0- to 5-V range corresponds to the hexadecimal values 0000 to 1770 (0 to 6000). The entire data range is FED4 to 189C (–300 to 6300). A negative voltage is expressed as a two's complement (16 bits). If the line is disconnected, the data will be the same as an input of 0 V (0000 Hex).

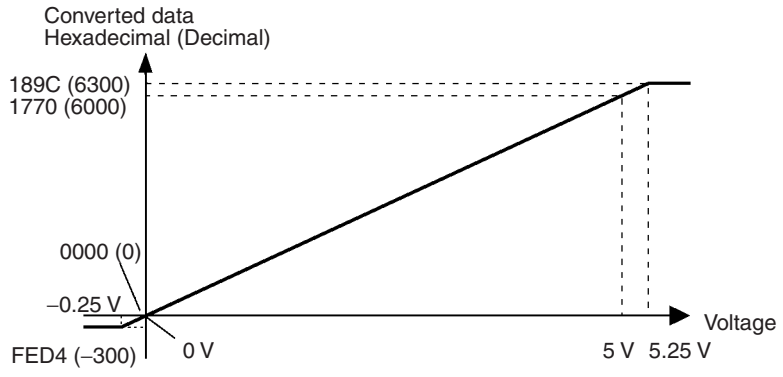


**1 to 5 V**

The 1- to 5-V range corresponds to the hexadecimal values 0000 to 1770 (0 to 6000). The entire data range is FED4 to 189C (–300 to 6300). If the input voltage falls below 0.8 V, the open-circuit detection function will activate and the converted data will be set to 7FFF.

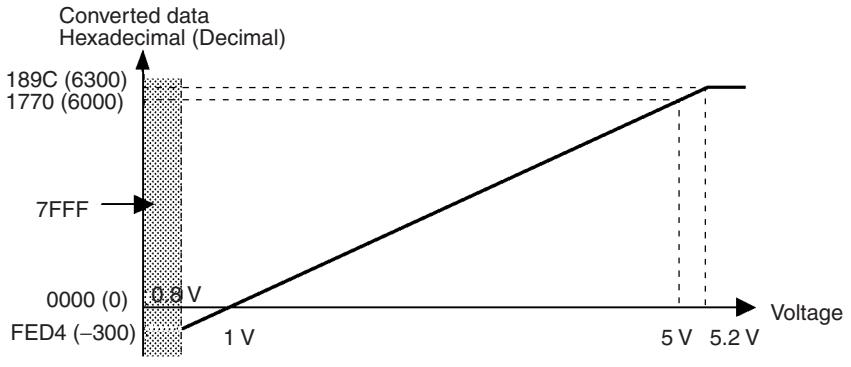


**0 to 20 mA**

The 0- to 20-mA range corresponds to the hexadecimal values 0000 to 1770 (0 to 6000). The entire data range is FED4 to 189C (–300 to 6300). A negative voltage is expressed as a two's complement (16 bits). If the line is disconnected, the data will be the same as an input of 0 mA (0000 Hex).

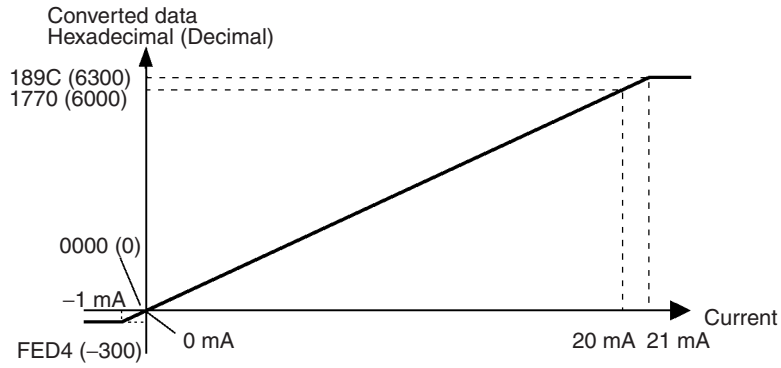


**4 to 20 mA**

The 4- to 20-mA range corresponds to the hexadecimal values 0000 to 1770 (0 to 6000). The entire data range is FED4 to 189C (–300 to 6300). If the input current falls below 3.2 mA, the open-circuit detection function will activate and the converted data will be set to 7FFF.

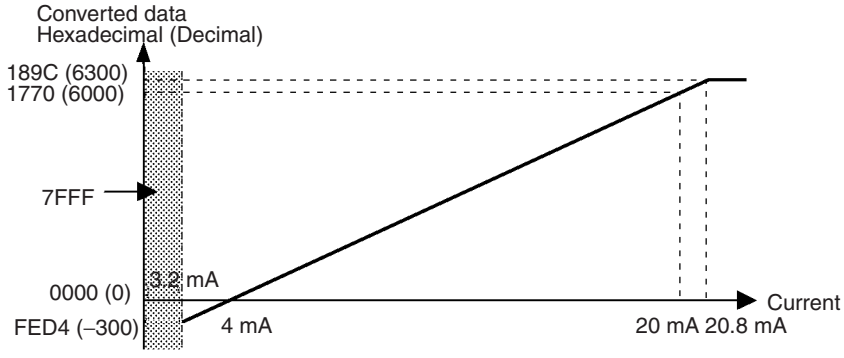


**Number of Inputs**

The number of inputs can be limited to four by turning ON pin 14 of the DIP switch. Changing the number of inputs from eight to four reduces the sampling time from 8 ms to 4 ms, providing faster conversion.

If four inputs are used, the number of words allocated to the Input Unit in the PLC is also reduced to 4 words. When only four inputs are used, inputs 0, 2, 4 and 6 are used (i.e., inputs 1, 3, 5 and 7 cannot be used.)

**Averaging Function Setting**

The averaging function can be enabled for all inputs (0 through 7) by turning ON pin 13 of the DIP switch. The averaging function outputs the average (a moving average) of the last eight input values as the converted value. Use this function to smooth inputs that vary like the one in the following diagram.

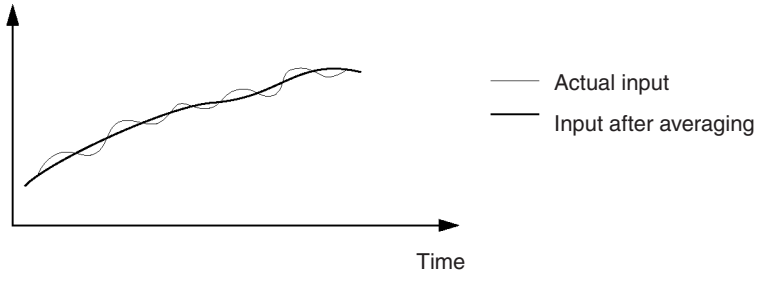


**Note** The time required for refreshing converted data remains 1 ms/point when the averaging function is enabled. The first communications data after the power is turned ON will be output after averaging eight samples.

**Open-circuit Detection Function**

The open-circuit detection function is activated when the input range is set to 1 to 5 V and the voltage drops below 0.8 V, or when the input range is set to 4

to 20 mA and the current drops below 3.2 mA. When the opencircuit detection function is activated, the converted data will be set to 7FFF.

The open-circuit detection function is enabled or cleared when data is converted. If the input returns to the convertible range, the open-circuit detection is cleared automatically and the output returns to the normal range.

**Common Power Supply for Input Devices**

If an open-circuit occurs when more than one input device is using the same power supply, and voltage input is being supplied, the following situation will occur (this does not apply when current input is being supplied).

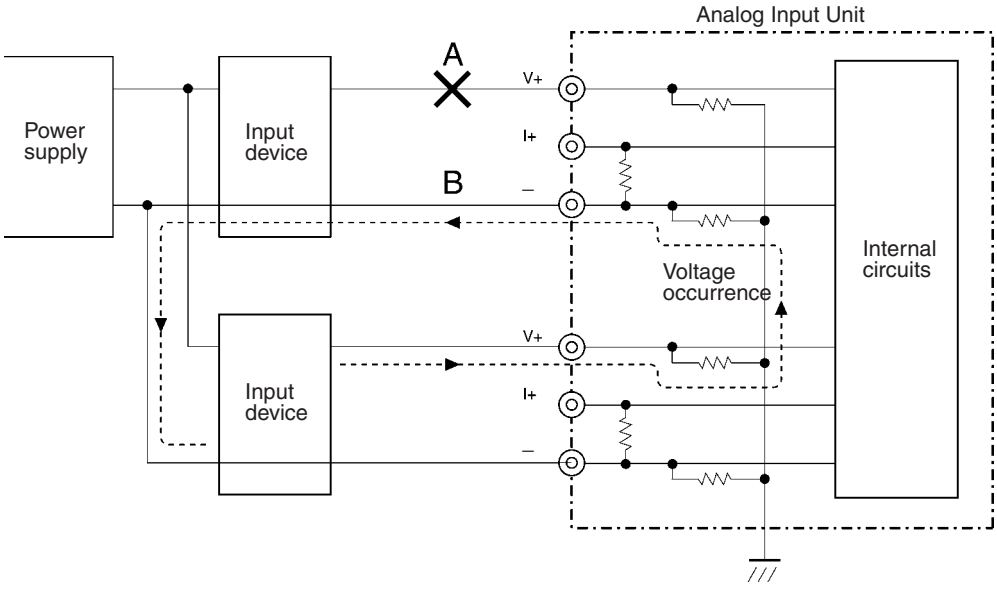


If an open-circuit occurs at A in the above diagram, a sneak circuit will be created in the direction of the arrow, and even though the circuit is open, a voltage will exist. This voltage will be approximately 1/3 to 1/2 of the output of the input devices in the part of the circuit that is not open. (The same will apply if an open circuit occurred at B.) With such a voltage present in the circuit, the open-circuit will not be detected. When voltage input is being supplied, either set up the input devices so that they are not using the same power supply, or use isolators for each input.

**Converted Data**

**For 8 Inputs**

| | Bit 15 14 13 12 11 10 9 8 7 6 5 4 3 2 1 0 |
|---|---|
| First word | Input 0 converted data |
| First word + 1 | Input 1 converted data |
| First word + 2 | Input 2 converted data |
| First word + 3 | Input 3 converted data |
| First word + 4 | Input 4 converted data |
| First word + 5 | Input 5 converted data |
| First word + 6 | Input 6 converted data |
| First word + 7 | Input 7 converted data |

**For 4 Inputs**

| | Bit 15 14 13 12 11 10 9 8 7 6 5 4 3 2 1 0 |
|---|---|
| First word | Input 0 converted data |
| First word + 1 | Input 1 converted data |
| First word + 2 | Input 2 converted data |
| First word + 3 | Input 3 converted data |

If the conversion data is a negative number, it is expressed as a two's complement. To obtain an absolute value from this two's complement, the NEG instruction is useful.

**Conversion Time**

The conversion data is refreshed every 8 ms for all 8 points. With 4 inputs, the data is converted every 4 ms for all 4 points.

**Dimensions**

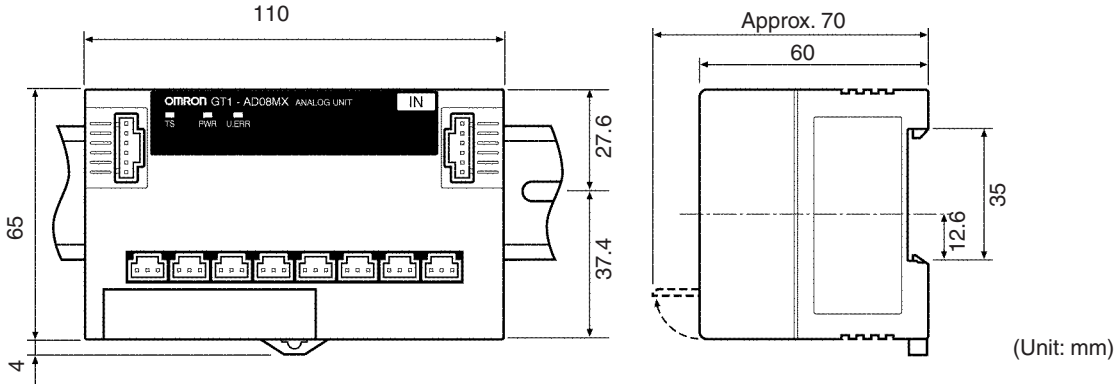


**Note** The vertical center of the Unit is 4.9 mm lower than the center of the DIN track. The Unit therefore extends downward 41.4 mm (including the mounting hook) from the DIN track center.

## 5-1-3 Settings Using the Configurator

The input range for the Analog Input Unit can be set using version 1.11 or later of the DeviceNet Configurator (referred to as the Configurator below). Using Ver. 1.20 or later, you can also adjust or clear the offset and gain settings.

**Input Range Settings**

Use the following procedure to set the input range. The DeviceNet and the MULTIPLE I/O TERMINAL must be connected first.

Note The input range can be set for each point using the Configurator. Ranges can be set in 2-point units by setting DIP switches.

***1,2,3...***

1. Using the DIP switch for the Analog Input Unit, make the Software Setting Enable/Disable setting to enable by making the following pin settings:
   GT1-AD04: Set pin 10 to ON.
   GT1-AD08MX: Set pin 16 to ON.
2. Turn ON the power supply for all the Units of the MULTIPLE I/O TERMINAL, including the Analog Unit and the Communications Unit.
3. Connect the Configurator to the DeviceNet network, making it online.
4. On the device list for the Configurator, double-click the Communications Unit to which the Analog Input Unit is connected.

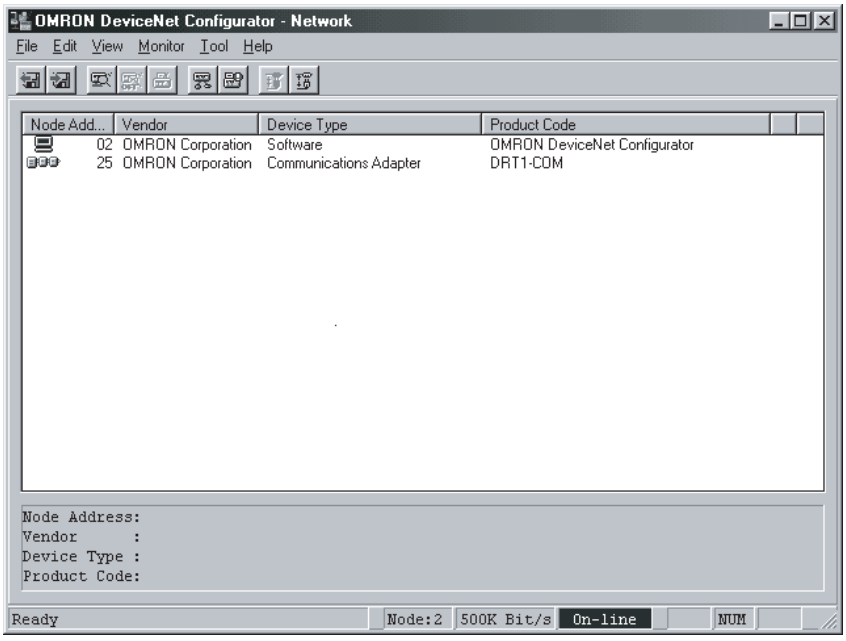


The Edit Device Parameters window for the Communications Unit that is double-clicked, will be displayed.

5. Click ***Set*** on the right of the Analog Input Unit to be set.
   ***Unit 1*** to ***Unit 8*** correspond to I/O Units #0 to #7.

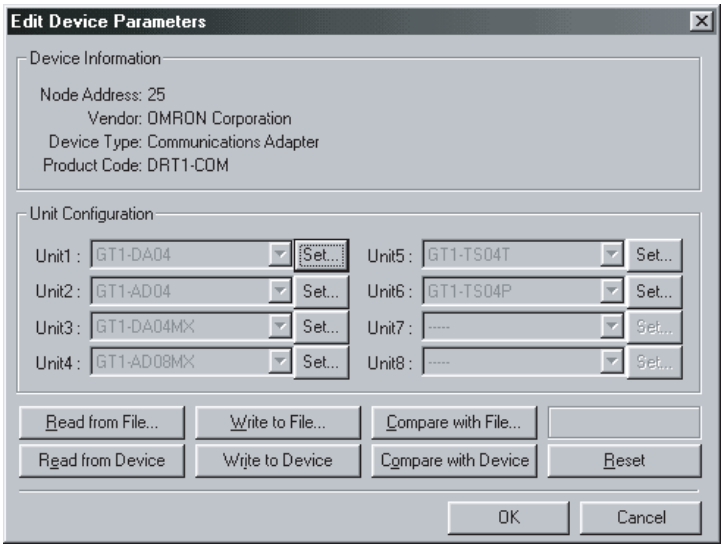


   The Edit Unit Parameters window for the Analog Input Unit will be displayed.

6. Double-click the line for the input range to be changed, or alternatively, click ***Set Parameters*** once with the line selected.

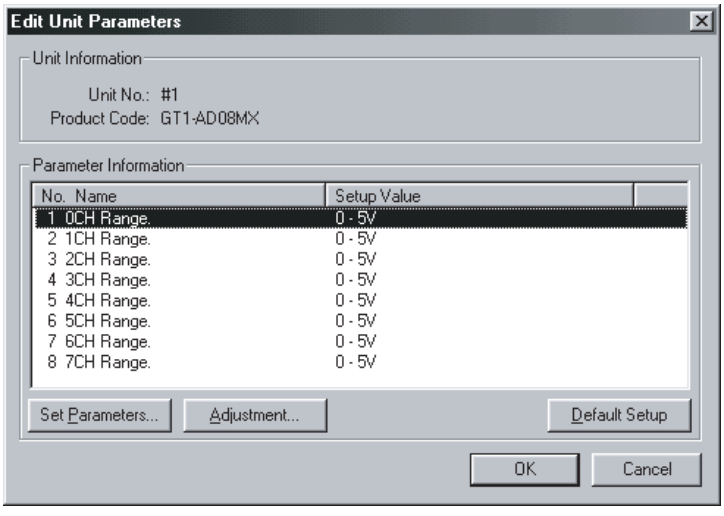


   The Parameter Setting window will be displayed.

7. Select the desired input range and click ***OK***.

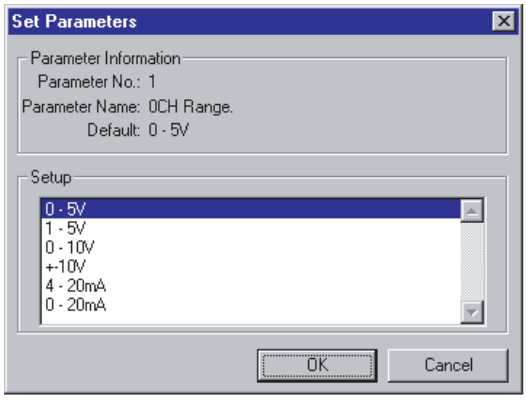

The input range will be set and the window for step 6 will appear again.

8. To change other input ranges, repeat steps 6 and 7.
9. When all the required input ranges have been changed, click ***OK*** in the Edit Unit Parameters window of the Analog Input Unit. The Edit Device Parameters window for the Communications Unit will appear again.
10. To make the settings for other I/O Units, repeat steps 5 to 9.
11. From the Edit Device Parameters window of the Communications Unit, click ***Write to Device***.

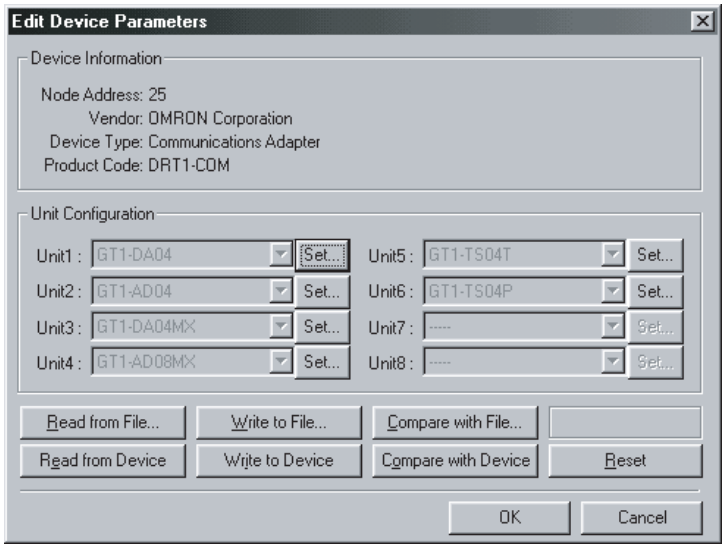


The specified input range will be set for the Analog Input Unit. At this stage, however, the setting is not enabled.

12. From the Edit Device Parameters window of the Communications Unit, click ***Reset***.

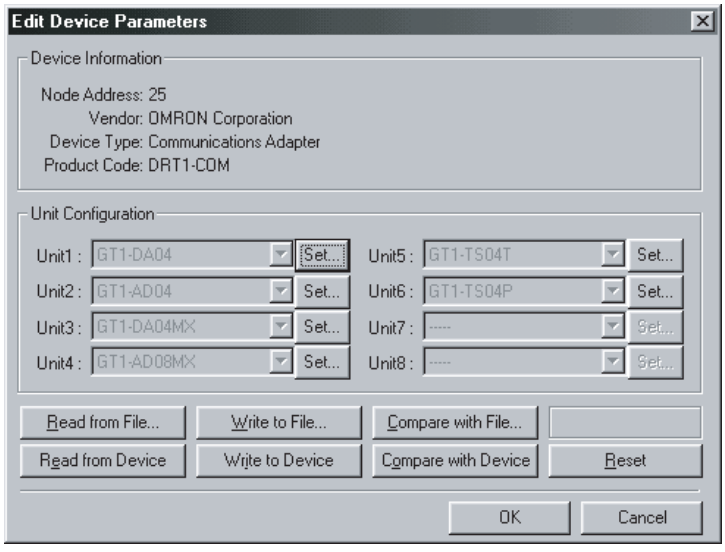


The Communications Unit and all the I/O Units connected to the Communications Unit will be reset, and the specified parameters (for example, for input range) will be enabled.

Note Even if ***Reset*** is not clicked and the power supply for the Communications Unit is turned OFF and ON again, the settings will be enabled.

**Adjusting Offset and Gain**

Use the following procedure to adjust the offset and gain settings. The DeviceNet and the MULTIPLE I/O TERMINAL must be connected first.

**Note**

1. The offset and gain can be adjusted only with a Configurator Ver. 1.20 or later.
2. With the earlier model GT1-AD08MX Analog Input Unit, the offset and gain cannot be adjusted, even with a Configurator Ver. 1.20 or later. Check the label on the front on the Unit for whether the offset and gain can be adjusted. Offset and gain can be adjusted only if the letter B appears on the label as shown below.

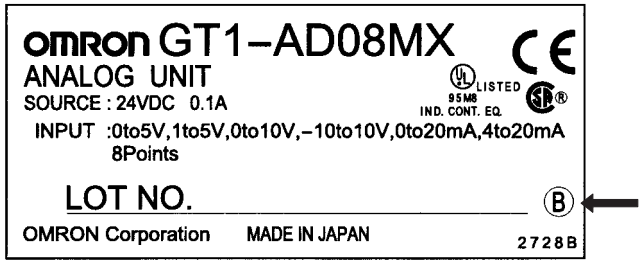


**Offset Adjustment**

Offset adjustment is used to adjust inputs so that when the value corresponding to 0% in the input range is input, it is converted accurately to 0%. Offset adjustment is used when input voltage and input current differ from the actual value of 0% due to the features of the Unit or the method of connection being used.

E.g.: Input range is 0 to 10 V

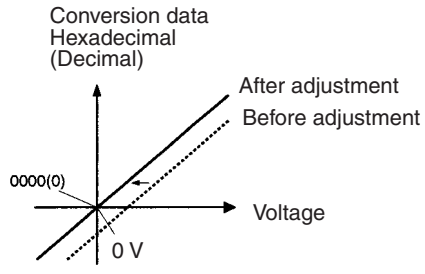


The possible range of offset adjustment depends on the input range. Refer to the following table.

| Input range | Input corresponding to 0% | Adjustment range |
|---|---|---|
| 0 to 10 V | 0 V | –0.5 to 0.5 V |
| –10 to 10 V | –10 V | –11.0 to –9.0 V |
| 1 to 5 V | 1 V | 0.8 to 1.2 V |
| 0 to 5 V | 0 V | –0.25 to 0.25 V |
| 4 to 20 mA | 4 mA | 3.2 to 4.8 mA |
| 0 to 20 mA | 0 mA | –1.0 to 1.0 mA |

If the input corresponding to 0% is outside the range of possible adjustments shown in the above table, check the connection to the input device.

**Gain Adjustment**

Gain adjustment is used to adjust the rate of fluctuation of input conversion values so that when the value corresponding to 100% in the input range is input, it is converted accurately to 100%. Gain adjustment is used when the greater the input voltage and input current, the greater the difference from the

actual value due to the features of the Unit or the method of connection being used.

E.g.: Input range is 0 to 10 V

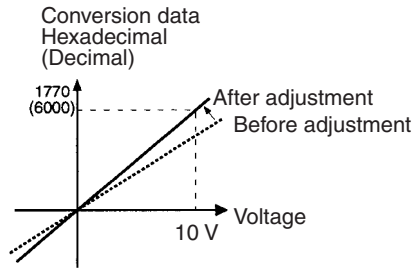


The possible range of gain adjustment depends on the input range. Refer to the following table.

| Input range | Input corresponding to 100% | Adjustment range |
|---|---|---|
| 0 to 10 V | 10 V | 9.5 to 10.5 V |
| –10 to 10 V | 10 V | 9.0 to 11.0 V |
| 1 to 5 V | 5 V | 4.8 to 5.2 V |
| 0 to 5 V | 5 V | 4.75 to 5.25 V |
| 4 to 20 mA | 20 mA | 19.2 to 20.8 mA |
| 0 to 20 mA | 20 mA | 19.0 to 21.0 mA |

If the input corresponding to 100% is outside the range of possible adjustments shown in the above table, check the connection to the input device.

**Adjustment Procedure**

*1,2,3...*

1. Connect the input device to the Analog Input Unit that is to be adjusted.
2. Turn ON the power supply to all the Units of the MULTIPLE I/O TERMINAL, including Analog Input Unit to be adjusted and the Communications Unit.
3. Connect the Configurator to the DeviceNet network and go online.

4. On the device list for the Configurator, double-click the Communications Unit to which the Analog Input Unit is connected.

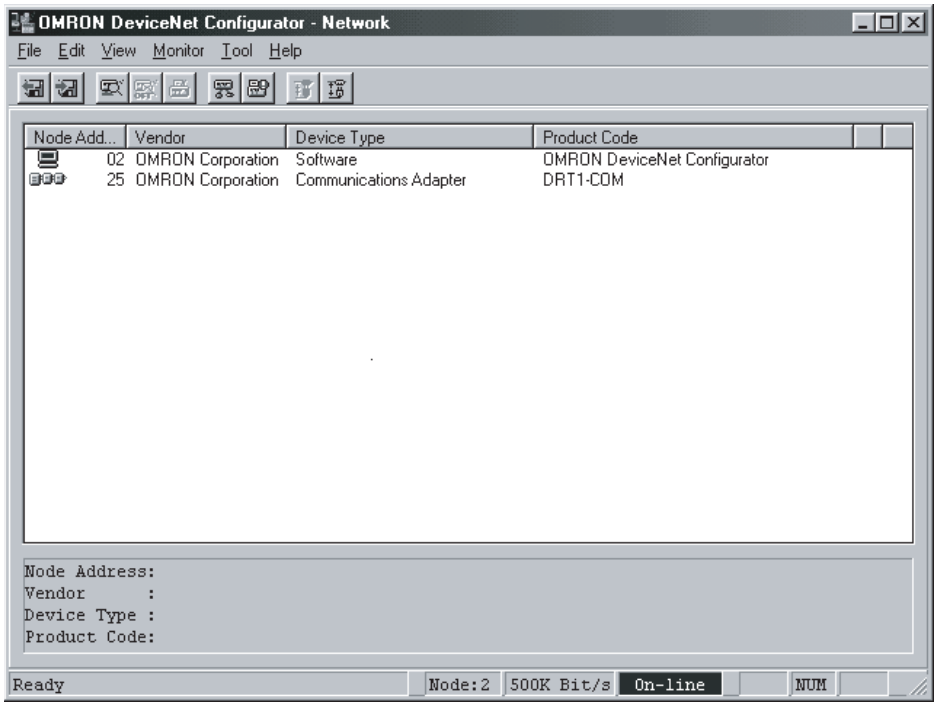


The Edit Device Parameters Window for the selected Communications Unit will be displayed.

5. Click ***Set*** on the right of the Analog Input Unit to be set. ***Unit 1*** to ***Unit 8*** correspond to I/O Units #0 to #7.

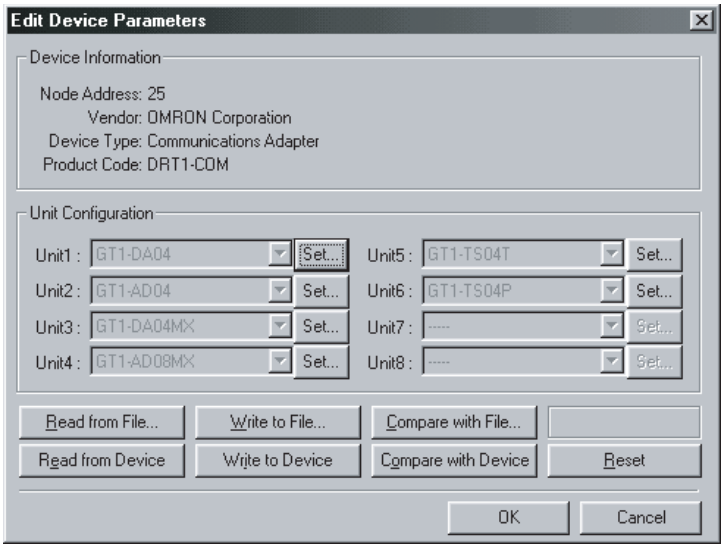


The Edit Unit Parameters Window for the Analog Input Unit will be displayed.

6. Click ***Adjustment***.

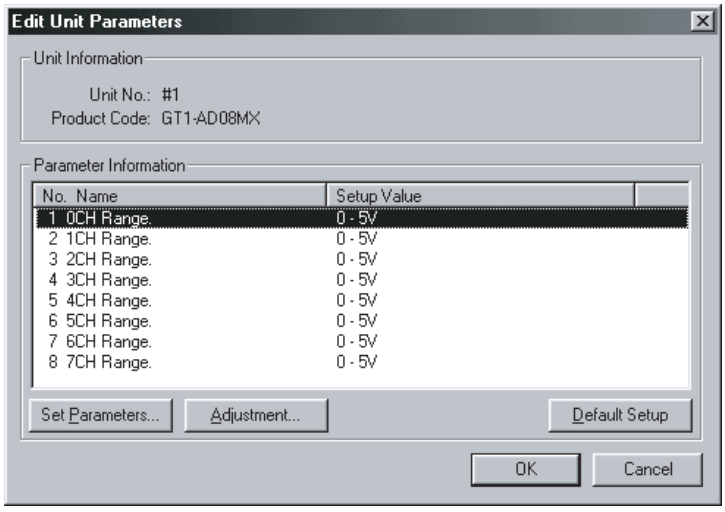


The Unit Adjustment Window will be displayed.

7. Click the Down Arrow and select the input words and the input range to be adjusted.

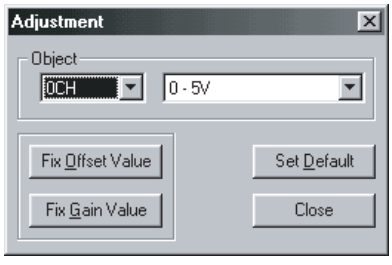


8. Apply the input voltage or input current corresponding to 0% to the input terminal on the Analog Input Unit.
9. Click ***Fix Offset Value*** when the appropriate input voltage or input current has been applied according to step 8.

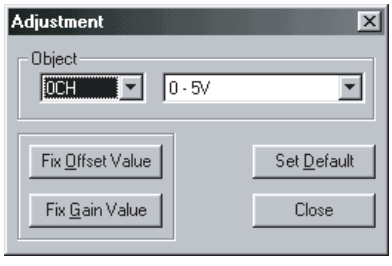


The offset will be set so that the input voltage or input current are converted to a value of 0%, and the value of the offset will be stored in the EEPROM in the Analog Input Unit. Reset the Unit to enable the new setting.

10. Apply the input voltage or input current corresponding to 100% to the input terminal on the Analog Input Unit.

11. Click ***Fix Gain Value*** when the appropriate input voltage or input current has been applied according to step 10.

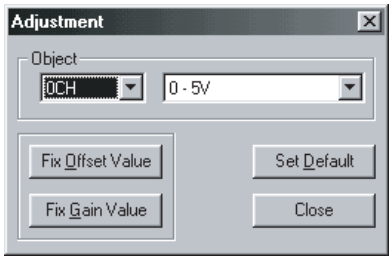


The gain will be adjusted so that the input voltage or input current will be converted to a value of 100%, and the value of the gain will be stored in the EEPROM in the Analog Input Unit. Reset the Unit to enable the new setting.

12. Repeat steps 7 to 11 to adjust other inputs as necessary.
13. When you have completed all the adjustments, click ***Close***. A message asking if you want to reset will appear. Click ***Yes***. The Communications Unit and all I/O Units connected to it will be reset, and the new settings will be enabled.

**Clearing Offset and Gain Settings**

All offset and gain settings in the Analog Input Unit can be cleared at once. Use the following procedure to clear the offset and gain settings stored in the EEPROM in the Analog Input Unit. The DeviceNet and the MULTIPLE I/O TERMINAL must be connected first.

**Note** The offset and gain can be adjusted only with a Configurator Ver. 1.20 or later.

***1,2,3...***

1. Turn ON the power supply to all the Units of the MULTIPLE I/O TERMINAL, including Communications Unit and the Analog Input Unit that is to be cleared.
2. Connect the Configurator to the DeviceNet network and go online.
3. On the device list for the Configurator, double-click the Communications Unit to which the Analog Input Unit is connected.

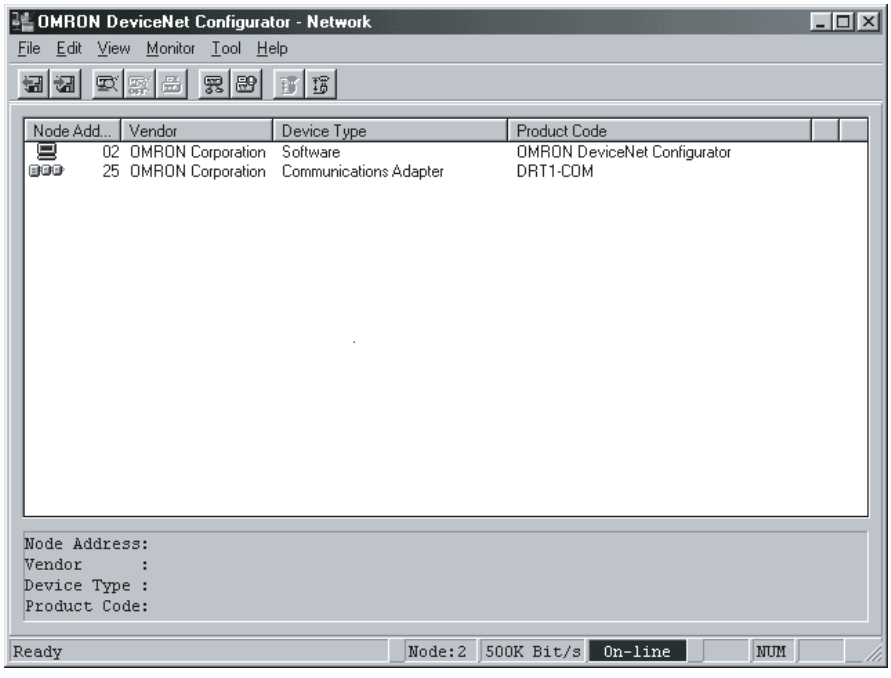


The Edit Device Parameters Window for the selected Communications Unit will be displayed.

4. Click ***Set*** on the right of the Analog Input Unit to be set. ***Unit 1*** to ***Unit 8*** correspond to I/O Units #0 to #7.

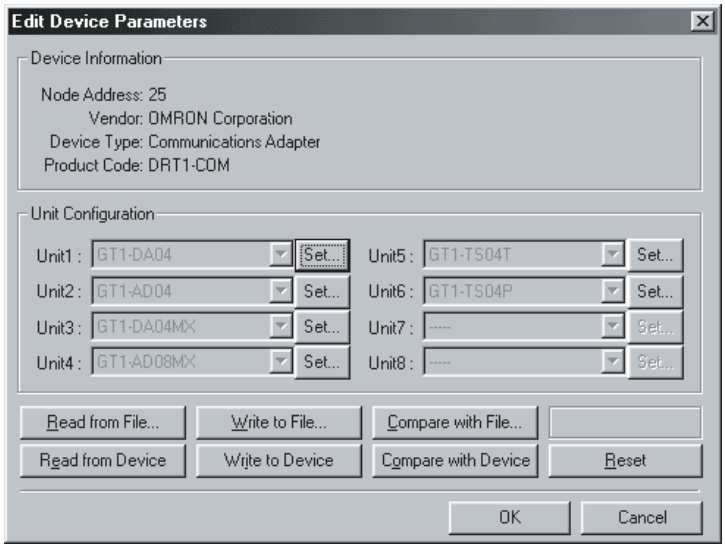


The Edit Unit Parameters Window for the Analog Input Unit will be displayed.

5. Click ***Adjustment***.

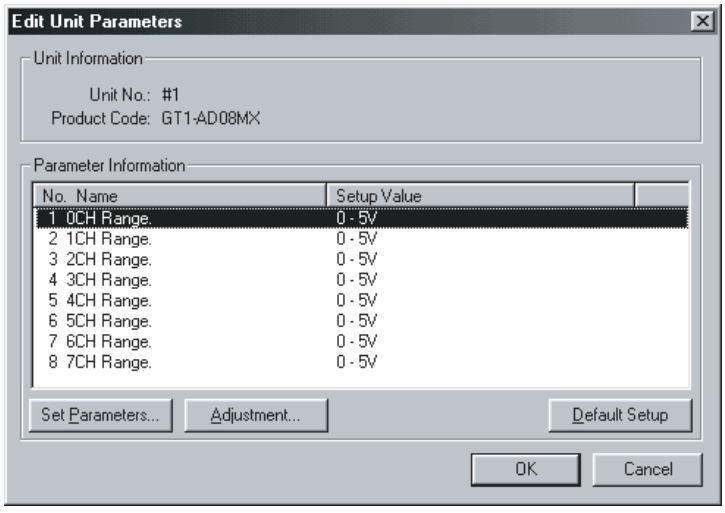


The Unit Adjustment Window will be displayed.

6. Click ***Set Default***.

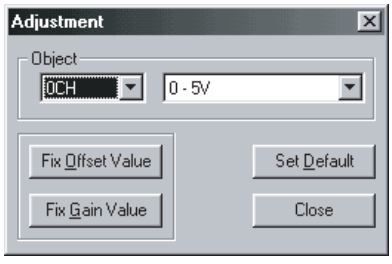

7. A message asking you to confirm will appear. Click ***Yes***.

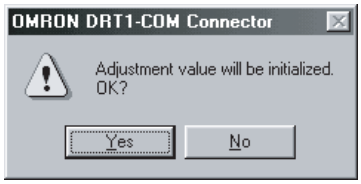


The offset and gain settings stored in the EEPROM in the Analog Input Unit will be reset to the default values. Reset the Unit to enable the default settings.

8. After clearing the settings, click ***Close***. A message asking if you want to reset will appear. Click ***Yes***. The Communications Unit and all I/O Units connected to it will be reset, and the default settings will be enabled.

# 5-2 Analog Output Units

## 5-2-1 GT1-DA04

**General Specifications**

| Item | | Specification |
|---|---|---|
| I/O connections | | Terminal block (M3) |
| Number of outputs | | 4 outputs (allocated four words in the Master Unit) |
| Internal power supply | Voltage range | 20.4 to 26.4 VDC (24 VDC $^{+10\%}/_{-15\%}$) |
| | Current consumption in Unit (inrush current) | 150 mA max.<br>(inrush current 20 A max., pulse width 1ms max.) |
| Current consumption (I/O Unit interface) | | 50 mA max. |
| Noise immunity | | ±2000 V<br>(IEC61000-4-4 via fast transient noise simulator) |
| Vibration resistance | | 10 to 150 Hz, 1.0-mm double amplitude or 70 m/s$^2$ |
| Shock resistance | | 200 m/s$^2$ |
| Ambient temperature | | –10°C to 55°C |
| Ambient humidity | | 25% to 85% (with no condensation) |
| Operating atmosphere | | No corrosive gases |
| Storage temperature | | –25°C to 65°C |
| Safety standards | | UL508, CSA22.2 |
| EMC directives | | EN50081-2, EN50082-2 |
| Mounting | | DIN 35-mm track |
| Weight | | Approx. 230 g |

**Characteristics**

| Item | | Specification | |
|---|---|---|---|
| | | Voltage outputs | Current outputs |
| Output signal range | | 0 to 5 V, 1 to 5 V, 0 to 10 V, or –10 to 10 V | 4 to 20 mA |
| Allowable external output load resistance | | 5 KΩ min. | 600 Ω min. |
| External output impedance | | 0.5 Ω max. | --- |
| Resolution | | 1/6000 (full scale) | |
| Accuracy | 25°C | ±0.4% FS | |
| | –10°C to 55°C | ±0.8% FS | |
| Conversion time | | 4 ms/4 points | |
| Converted output data (Binary) | | Binary<br>–10- to 10-V range: F448 to 0 to 0BB8 full scale<br>Other signal ranges: 0000 to 1770 full scale | |
| Dielectric strength | | 500 VAC; detected current 1 mA (between communications section and analog output, and between internal power supply and analog output) | |
| Isolation method | | Photocoupler insulation (between communications part and analog output)<br>(no insulation between analog outputs) | |

### Components

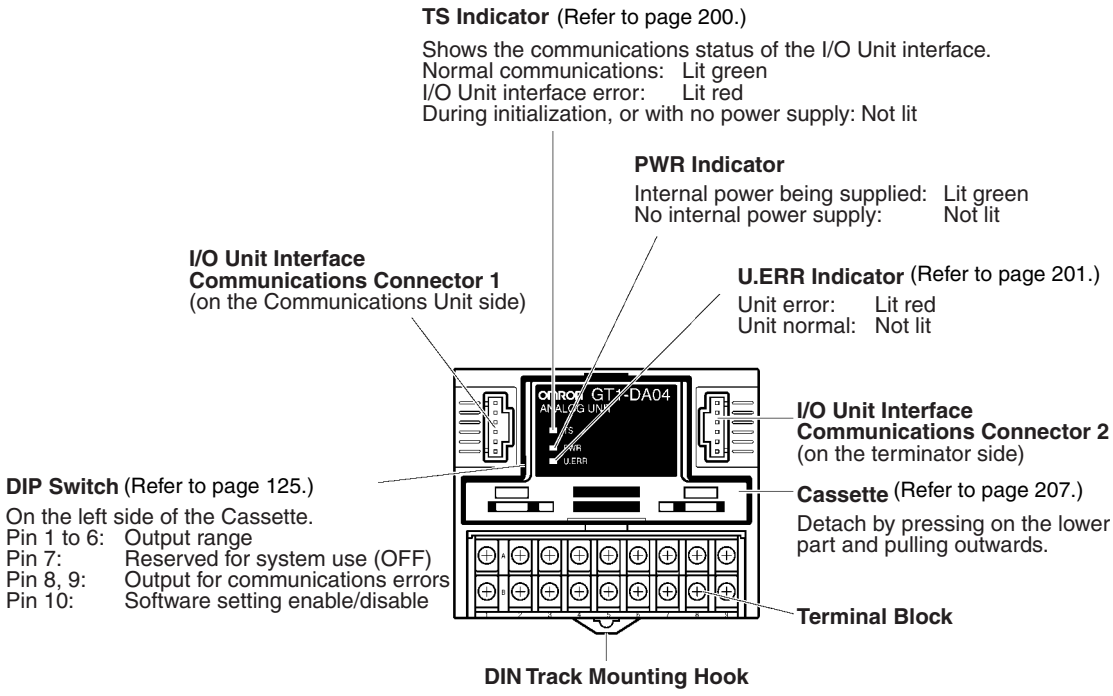


### DIP Switch Settings

The following diagram shows the functions of the DIP switch.

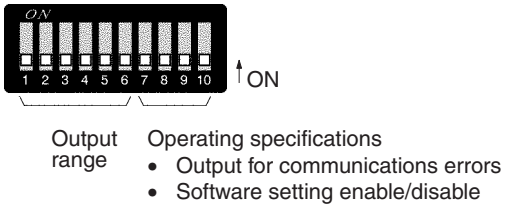


The following table summarizes the DIP switch settings. (All pins are factory-set to OFF.)

| Pin(s) | Function | Settings | Meaning |
|---|---|---|---|
| 1 through 6 | Output range | Output range settings (See below.) | |
| 7 | Reserved for system use | OFF | Must be set to OFF. |
| 8, 9 | Output for communications errors (See below.) | 8 9<br>OFF OFF<br>OFF ON<br>ON OFF<br>ON ON | Output<br>Clear to minimum (See below.)<br>Clear to maximum (See below.)<br>Clear to 0 V (for –10 to 10 V)<br>Clear to minimum (other than the above)<br>Hold |
| 10 | Software setting enable/disable | OFF | Set the output range and output for communications errors with pins 1 to 9. (factory-set) |
| | | ON | Output range setting (See note.) and output setting for communications errors can be set using the Configurator. |

**Note**

1. When setting the output range or output for communications errors using a DeviceNet Configurator, use version 1.11 or later. (If pin 10 is ON, and a setting is made using the Configurator, the output ranges will all be 0 to 5 V and the output for communications errors setting will be set to clear to minimum.)
2. Make sure the I/O Unit power supplies (including the I/O Unit interface power supply) are OFF when setting the DIP switch.
3. With an Analog Output Unit, output for communications errors is enabled using the switch on the Analog Output Unit. It does not depend on the Communications Unit "hold/clear communications error" setting.

**Output Range Settings**

As shown in the following table, the DIP switch output range settings are for two outputs each.

| Pin 1 | Pin 2 | Pin 3 | Output range settings for outputs 0 and 1 |
|---|---|---|---|
| Pin 4 | Pin 5 | Pin 6 | Output range settings for outputs 2 and 3 |
| OFF | OFF | OFF | 0 to 5 V (factory-set) |
| ON | OFF | OFF | 1 to 5 V |
| OFF | ON | OFF | 0 to 10 V |
| ON | ON | OFF | –10 to 10 V |
| OFF | OFF | ON | 4 to 20 mA |
| Other than the above | | | Cannot be set |

**Note** If output range setting is performed using the Configurator (version 1.11 or later), it is possible to make the setting for each point.

**Output Setting for Communications Errors**

When clear to minimum, clear to maximum, or clear to 0 V is set using DIP switch pins 8 and 9 and a communications error occurs, the outputs shown in the following table will be produced according to the output range.

| Output signal range | Clear to minimum | Clear to maximum | Clear to 0 V |
|---|---|---|---|
| 0 to 5 V | –0.25 V | 5.25 V | –0.25 V |
| 1 to 5 V | 0.8 V | 5.2 V | 0.8 V |
| 0 to 10 V | –0.5 V | 10.5 V | –0.5 V |
| –10 to 10 V | –11 V | 11 V | 0 V |
| 4 to 20 mA | 3.2 mA | 20.8 mA | 3.2 mA |

**Internal Circuits**

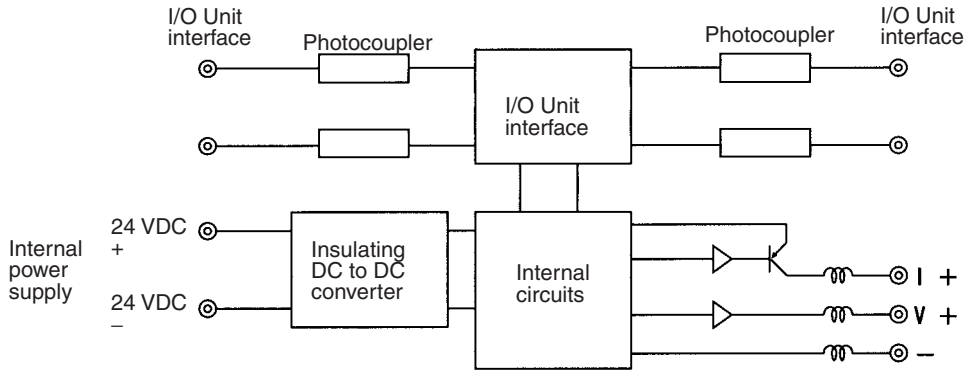

### Terminal Arrangement

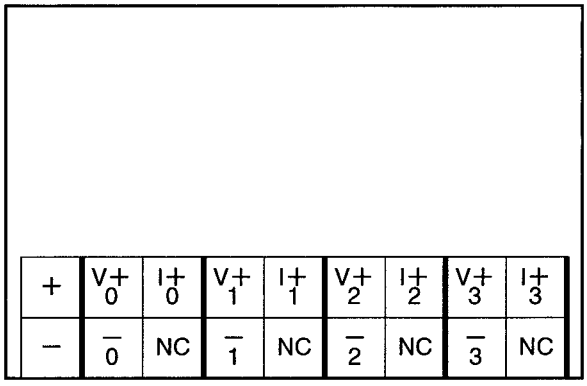


### Wiring

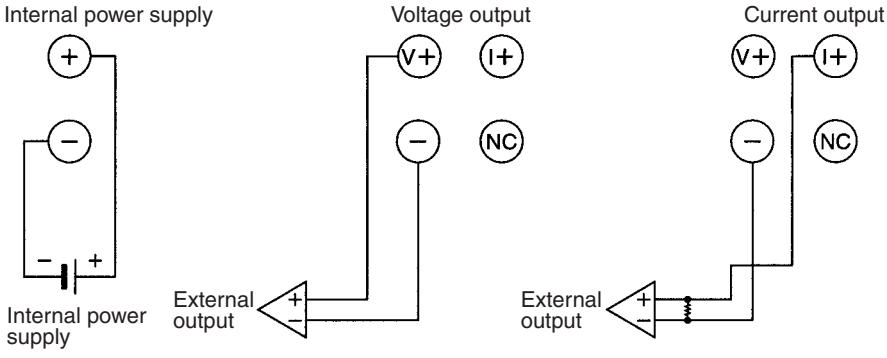


### Output Ranges and Converted Data

The Analog Output Unit converts the digital output data to analog values. The analog values depend on the output signal ranges, as shown in the following diagrams.

**1 to 5 V**

The hexadecimal values 0000 to 1770 (0 to 6000) correspond to an analog voltage range of 1 to 5 V. The entire output range is 0.8 to 5.2 V.

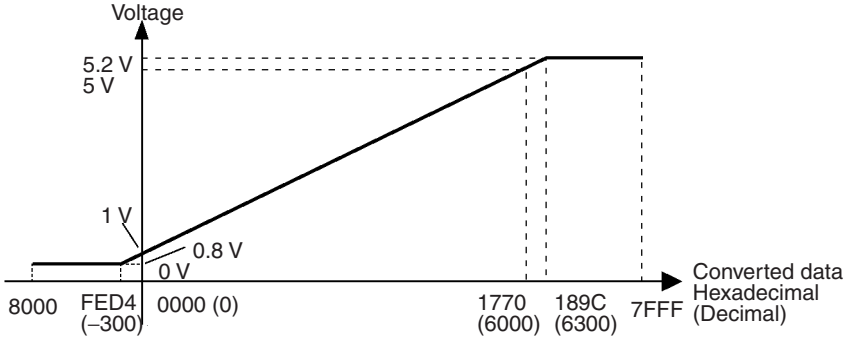

**0 to 5 V**

The hexadecimal values 0000 to 1770 (0 to 6000) correspond to an analog voltage range of 0 to 5 V. The entire output range is –0.25 to 5.25 V.

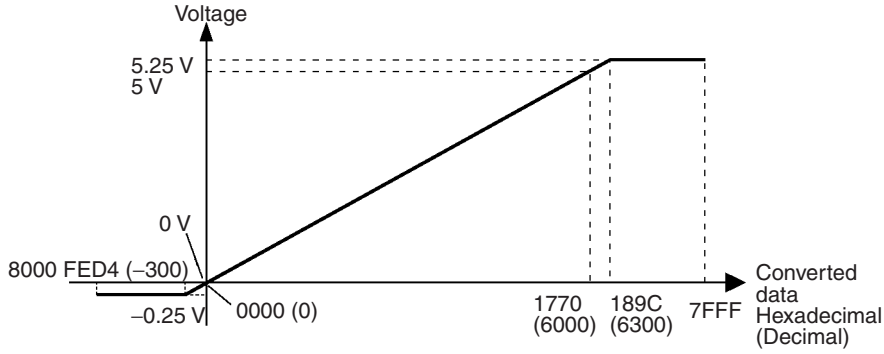


**0 to 10 V**

The hexadecimal values 0000 to 1770 (0 to 6000) correspond to an analog voltage range of 0 to 10 V. The entire output range is –0.5 to 10.5 V.

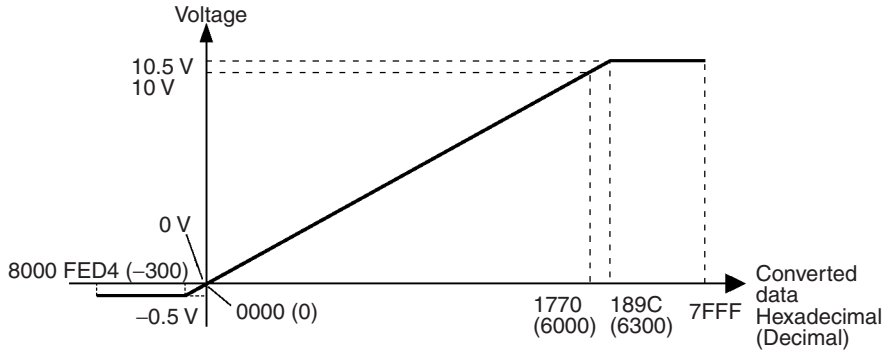


**–10 to 10 V**

The hexadecimal values F448 to 0BB8 (–3000 to 3000) correspond to an analog voltage range of –10 to 10 V. The entire output range is –11 to 11 V. Specify a negative voltage as a two's complement (16 bits).

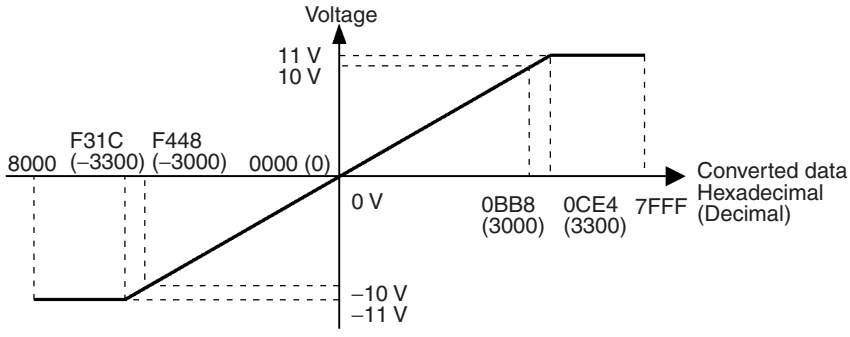

**4 to 20 mA**

The hexadecimal values 0000 to 1770 (0 to 6000) correspond to an analog current range of 4 to 20 mA. The entire output range is 3.2 to 20.8 mA.

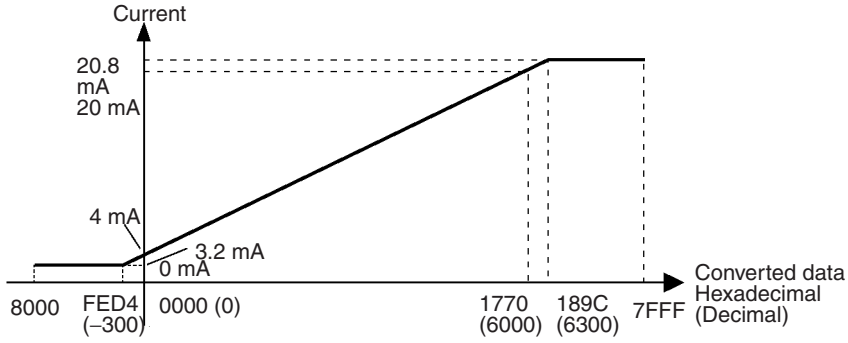


**Output Status after Communications Error**

The Configurator or pins 8 and 9 of the DIP switch can be used to determine the status of the outputs after a communications error occurs in DeviceNet or I/O Unit interface communications. The following settings are possible:

- Hold (maintain previous output status)
- Clear to minimum (clear to the lower limit of the output signal range)
- Clear to maximum (clear to the upper limit of the output signal range)
- Clear to 0 V (for –10 to 10 V only)

When the clear to minimum, clear to maximum, or clear to 0 V setting is used, the output data will be as shown in the following table.

| Output signal range | Clear to minimum | Clear to maximum | Clear to 0 V |
|---|---|---|---|
| 0 to 5 V | –0.25 V | 5.25 V | –0.25 V |
| 1 to 5 V | 0.8 V | 5.2 V | 0.8 V |
| 0 to 10 V | –0.5 V | 10.5 V | –0.5 V |
| –10 to 10 V | –11 V | 11 V | 0 V |
| 4 to 20 mA | 3.2 mA | 20.8 mA | 3.2 mA |

**Converted Data**

Output the converted data to the Master as shown in the following diagram.

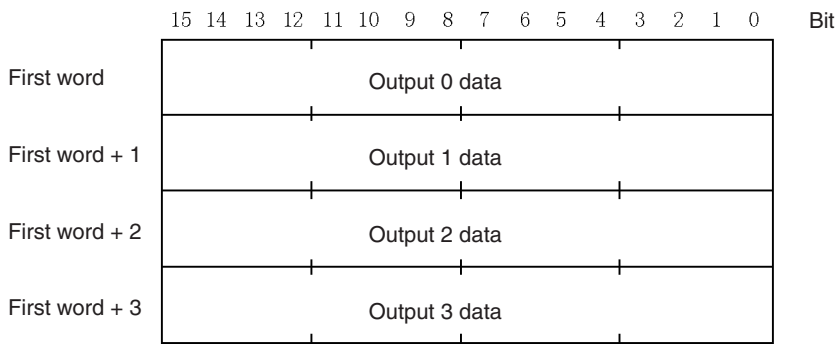


When a negative voltage is to be output, specify the conversion data as the two's complement. To obtain a two's complement from an absolute value, the NEG instruction is useful.

**Conversion Time**

The conversion data is refreshed every 4 ms for all 4 points.

**Dimensions**

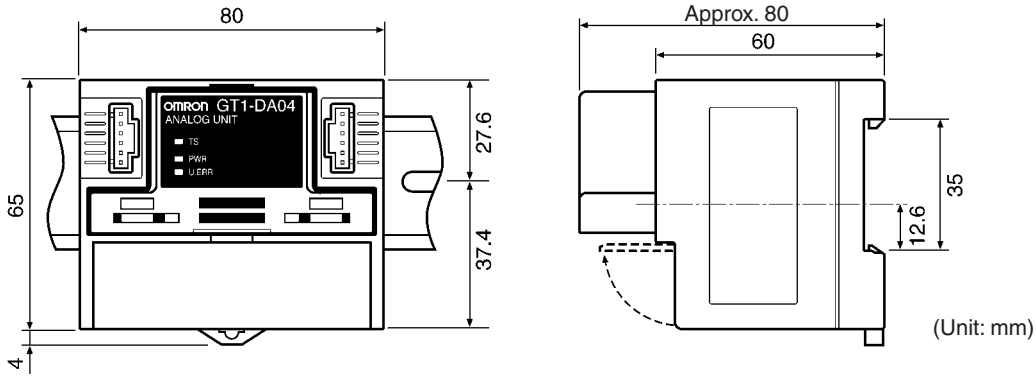


**Note** The vertical center of the Unit is 4.9 mm lower than the center of the DIN track. The Unit therefore extends downward 41.4 mm (including the mounting hook) from the DIN track center.

## 5-2-2 GT1-DA04MX

**General Specifications**

| Item | | Specification |
|---|---|---|
| I/O connections | | Connectors (made by MOLEX) |
| Number of outputs | | 4 outputs (allocated four words in the Master Unit) |
| Internal power supply | Voltage range | 20.4 to 26.4 VDC (24 VDC $^{+10\%}/_{-15\%}$) |
| | Current consumption in Unit (inrush current) | 100 mA max.<br>(inrush current 30 A max.) |
| Current consumption (I/O Unit interface) | | 50 mA max. |
| Noise immunity | | ±2000 V<br>(IEC61000-4-4 via fast transient noise simulator) |
| Vibration resistance | | 10 to 150 Hz, 1.0-mm double amplitude or 70 m/s$^2$ |
| Shock resistance | | 200 m/s$^2$ |
| Ambient temperature | | –10°C to 55°C |
| Ambient humidity | | 25% to 85% (with no condensation) |
| Operating atmosphere | | No corrosive gases |
| Storage temperature | | –25°C to 65°C |
| Safety standards | | UL508, CSA22.2 |
| EMC directives | | EN50081-2, EN50082-2 |
| Mounting | | DIN 35-mm track |
| Weight | | Approx. 180 g |

### Characteristics

| Item | | Specification |
|---|---|---|
| Output signal range | | 0 to 5 V, 1 to 5 V, 0 to 10 V, or –10 to 10 V (Current output not possible) |
| Allowable external output load resistance | | 5 KΩ min. |
| External output impedance | | 0.5 Ω max. |
| Resolution | | 1/6000 (full scale) |
| Accuracy | 25°C | ±0.4% FS |
| | –10°C to 55°C | ±0.8% FS |
| Conversion time | | 4 ms/4 points |
| Converted output data (Binary) | | Binary<br>–10- to 10-V range: F448 to 0 to 0BB8 full scale<br>Other signal ranges: 0000 to 1770 full scale |
| Dielectric strength | | 500 VAC; detected current 1 mA (between communications section and analog output, and between internal power supply and analog output) |
| Isolation method | | Photocoupler insulation (between communications part and analog output)<br>(no insulation between analog outputs) |

### Components

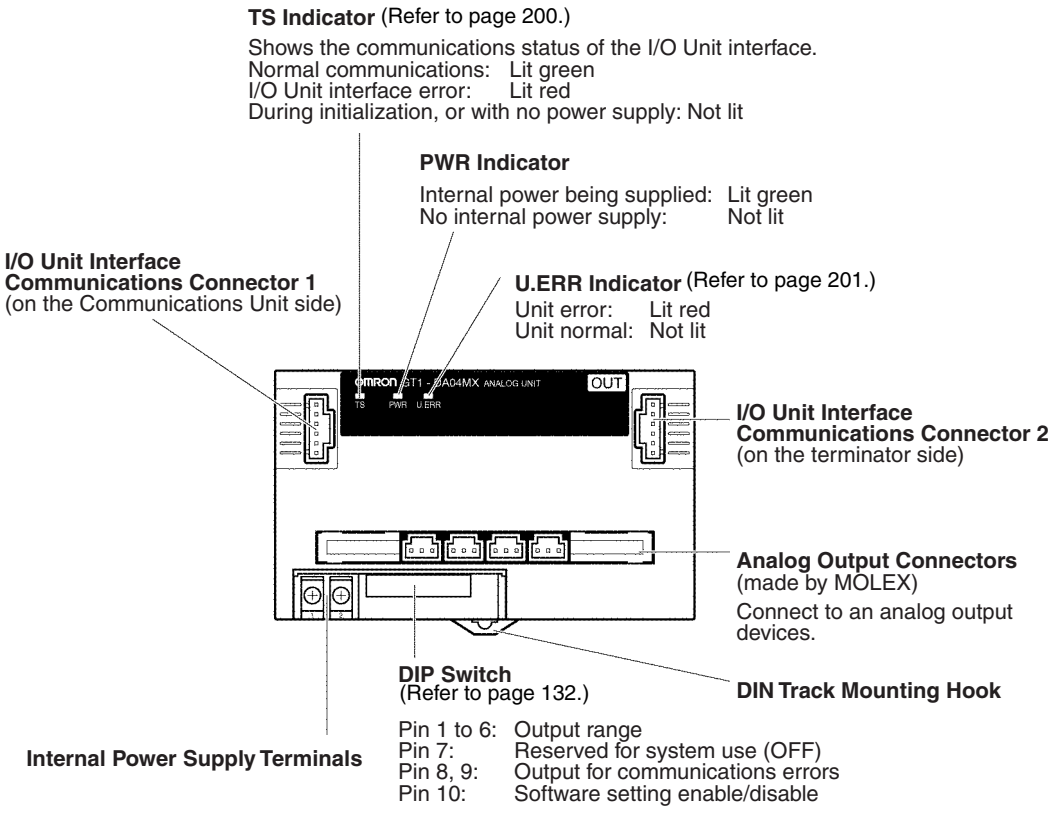

**DIP Switch Settings**

The following diagram shows the functions of the DIP switch.

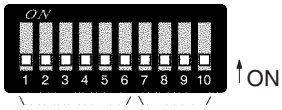


Output range

Operating specifications
Output for communications errors
Software setting enable/disable

The following table summarizes the DIP switch settings. (All pins are factory-set to OFF.)

| Pin(s) | Function | Settings | Meaning |
|---|---|---|---|
| 1 through 6 | Output range | Output range settings (See below.) | |
| 7 | Reserved for system use | OFF | Must be set to OFF. |
| 8, 9 | Output for communications errors (See below.) | 8 / 9 | Output |
| | | OFF / OFF | Clear to minimum (See below.) |
| | | OFF / ON | Clear to maximum (See below.) |
| | | ON / OFF | Clear to 0 V (for –10 to 10 V) Clear to minimum (other than the above) |
| | | ON / ON | Hold |
| 10 | Software setting enable/ disable | OFF | Set the output range, and output for communications errors, with pins 1 to 9. (factory-set) |
| | | ON | Output range setting (See note.) and output setting for communications errors can be set using the Configurator. |

**Note**

1. When setting the output range or output for communications errors using a DeviceNet Configurator, use version 1.11 or later. (If pin 10 is ON, and a setting is made using the Configurator, the output ranges will all be 0 to 5 V and the output for communications errors setting will be set to clear to minimum.)
2. Make sure the I/O Unit power supplies (including the I/O Unit interface power supply) are OFF when setting the DIP switch.
3. With an Analog Output Unit, outputs for communications errors is enabled using the switch on the Analog Output Unit. It does not depend on the Communications Unit “hold/clear communications error” setting.

**Output Range Settings**

As shown in the following table, the DIP switch output range settings are for two outputs each.

| Pin 1 | Pin 2 | Pin 3 | Output range settings for outputs 0 and 1 |
|---|---|---|---|
| Pin 4 | Pin 5 | Pin 6 | Output range settings for outputs 2 and 3 |
| OFF | OFF | OFF | 0 to 5 V (factory-set) |
| ON | OFF | OFF | 1 to 5 V |
| OFF | ON | OFF | 0 to 10 V |
| ON | ON | OFF | –10 to 10 V |
| Other than the above | | | Cannot be set |

**output for communications errors**

When clear to minimum, clear to maximum, or clear to 0 V is set using DIP switch pins 8 and 9, a communications error will be output according to the output range, as shown in the following table.

| Output signal range | Clear to minimum | Clear to maximum | Clear to 0 V |
|---|---|---|---|
| 0 to 5 V | –0.25 V | 5.25 V | –0.25 V |
| 1 to 5 V | 0.8 V | 5.2 V | 0.8 V |
| 0 to 10 V | –0.5 V | 10.5 V | –0.5 V |
| –10 to 10 V | –11 V | 11 V | 0 V |

### Internal Circuits

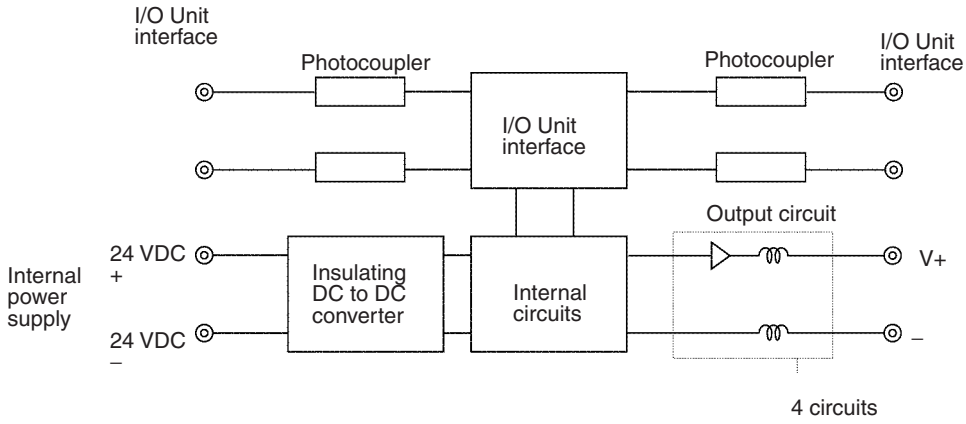


### Terminal/Connector Pin Arrangement

The arrangements of the terminals, the connectors and the connector pins are shown in the following diagram.

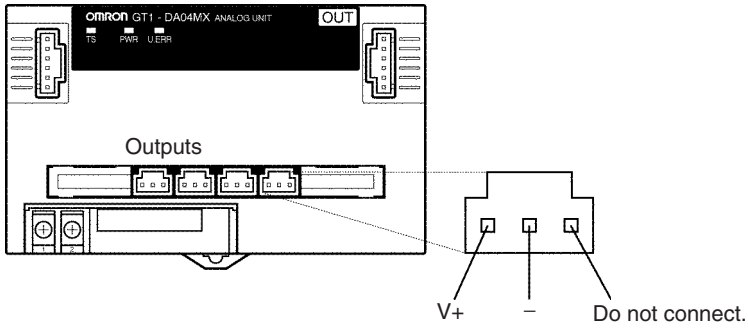

**Wiring**

Attach MOLEX connectors to the analog output connectors, and connect the outputs as shown in the following diagram.

**Applicable Connectors**

| Manufacturer | Connector | | Model number | Remarks |
|---|---|---|---|---|
| MOLEX | Crimp | Housing | 51030-0330 | |
| | | Reeled contacts | 70058-0004 | For AWG#24 to 30 |
| | | | 70058-0022 | For AWG#22 to 24 |
| | | Loose contacts | 70058-0204 | For AWG#24 to 30 |
| | | | 70058-0222 | For AWG#22 to 24 |
| | | Crimping tool | 57036-5000 | For AWG#22 to 26 |
| | | | 57037-5000 | For AWG#24 to 30 |

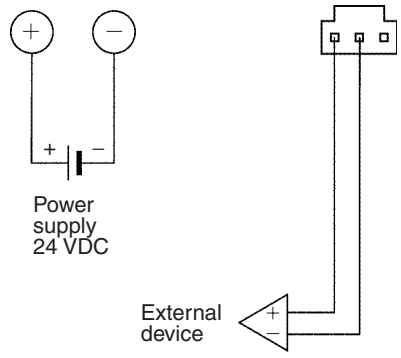


**Output Ranges and Converted Data**

The Analog Output Unit converts the digital output data to analog values. The analog values depend on the output signal ranges, as shown in the following diagrams.

**1 to 5 V**

The hexadecimal values 0000 to 1770 (0 to 6000) correspond to an analog voltage range of 1 to 5 V. The entire output range is 0.8 to 5.2 V.

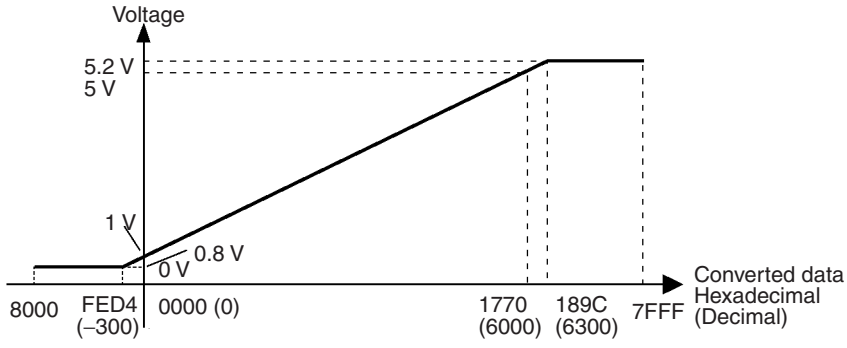

**0 to 5 V**

The hexadecimal values 0000 to 1770 (0 to 6000) correspond to an analog voltage range of 0 to 5 V. The entire output range is –0.25 to 5.25 V.

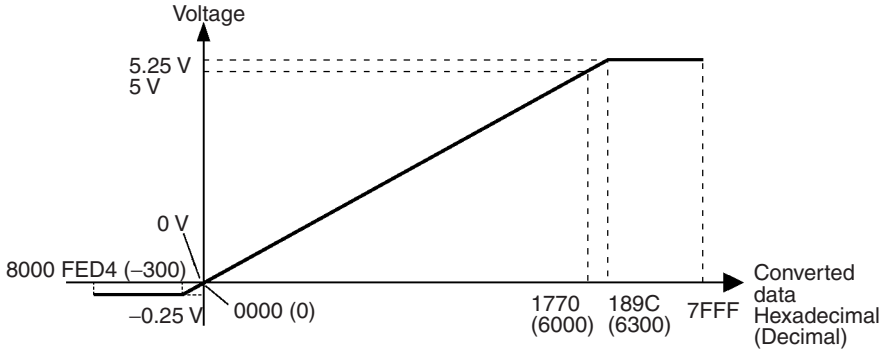


**0 to 10 V**

The hexadecimal values 0000 to 1770 (0 to 6000) correspond to an analog voltage range of 0 to 10 V. The entire output range is –0.5 to 10.5 V.

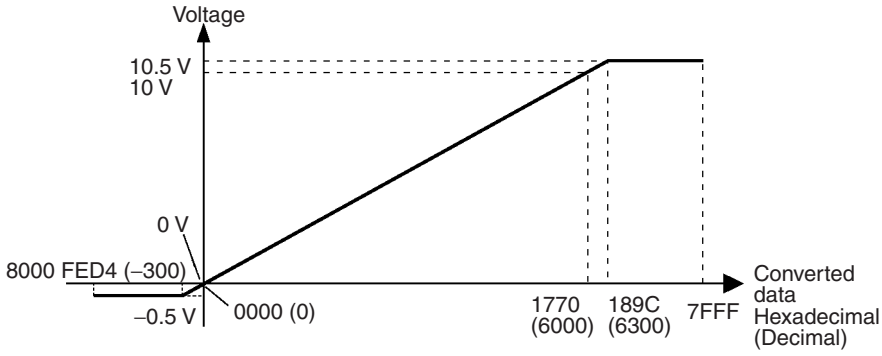


**–10 to 10 V**

The hexadecimal values F448 to 0BB8 (–3000 to 3000) correspond to an analog voltage range of –10 to 10 V. The entire output range is –11 to 11 V. Specify a negative voltage as a two's complement (16 bits).

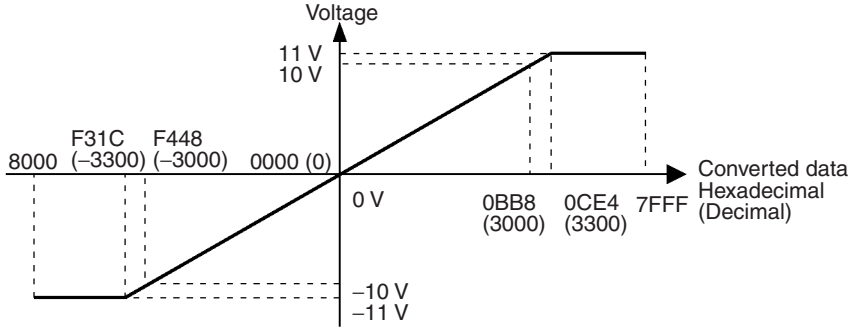

**Output Status after Communications Error**

Pins 8 and 9 of the DIP switch determine the status of the outputs after a communications error occurs in DeviceNet or I/O Unit interface communications.

| Settings | | Output status after communications error |
|---|---|---|
| Pin 8 | Pin 9 | |
| OFF | OFF | Clear to minimum (Clear to the lower limit of the output signal range.) |
| OFF | ON | Clear to maximum (Clear to the upper limit of the output signal range.) |
| ON | OFF | Clear to 0 V (for –10 to 10 V only)<br>Clear to minimum (other than the above) |
| ON | ON | Hold (Maintain previous output status.) |

When the clear to minimum, clear to maximum, or clear to 0 V setting is used, the output data is as shown in the following table.

| Output signal range | Clear to minimum | Clear to maximum | Clear to 0 V |
|---|---|---|---|
| 0 to 5 V | –0.25 V | 5.25 V | –0.25 V |
| 1 to 5 V | 0.8 V | 5.2 V | 0.8 V |
| 0 to 10 V | –0.5 V | 10.5 V | –0.5 V |
| –10 to 10 V | –11 V | 11 V | 0 V |

**Converted Data**

Output the converted data to the Master as shown in the following diagram.

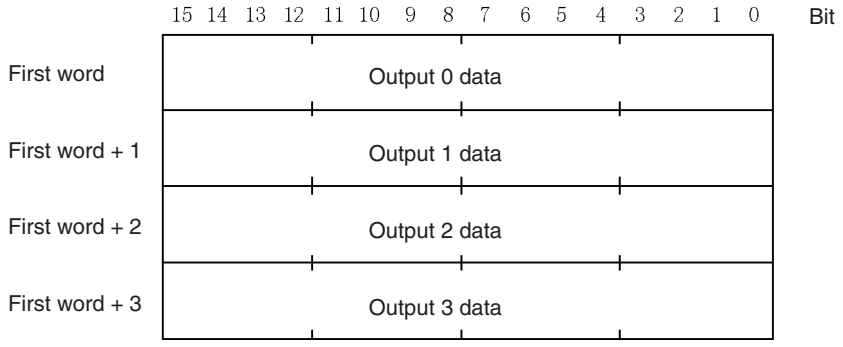


When a negative voltage is to be output, specify the conversion data as the two's complement. To obtain a two's complement from an absolute value, the NEG instruction is useful.

**Conversion Time**

The conversion data is refreshed every 4 ms for all 4 points.

**Dimensions**

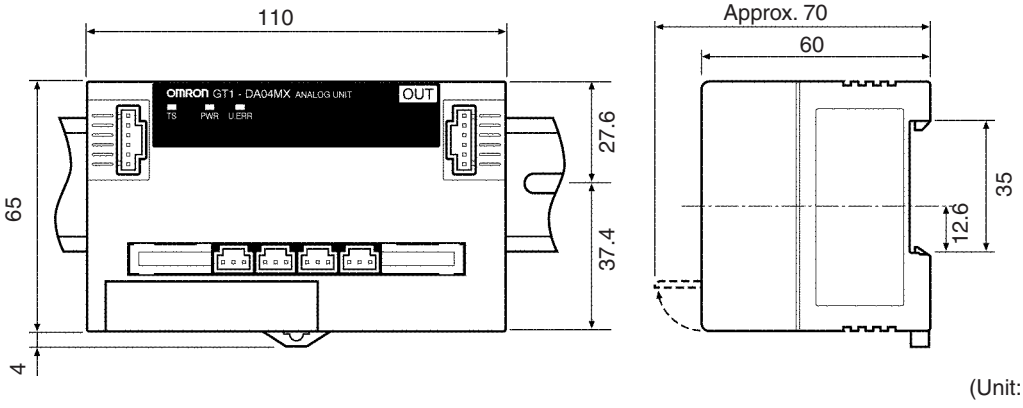


**Note** The vertical center of the Unit is 4.9 mm lower than the center of the DIN track. The Unit therefore extends downward 41.4 mm (including the mounting hook) from the DIN track center.

## 5-2-3 Settings Using the Configurator

The output range and the output for communications errors for the Analog Output Unit can be set using version 1.11 or later of the DeviceNet Configurator (referred to as the Configurator below). Using Ver. 1.20 or later, you can also adjust or clear the offset and gain settings.

**Setting the Output Range and Output for Communications Errors**

Use the following procedure to set the output range. The DeviceNet and the MULTIPLE I/O TERMINAL must be connected first.

Note The output range can be set for each point using the Configurator. Ranges can be set in 2-point units using DIP switches.

***1,2,3...***

1. Set pin 10 of the DIP switch for the Analog Output Unit to ON to set the Software Setting Enable/Disable setting to enable.
2. Turn the power supply ON for all the Units of the MULTIPLE I/O TERMINAL, including the Analog Unit and the Communications Unit.
3. Connect the Configurator to the DeviceNet network, making it online.
4. On the device list for the Configurator, double-click the Communications Unit to which the Analog Output Unit is connected.

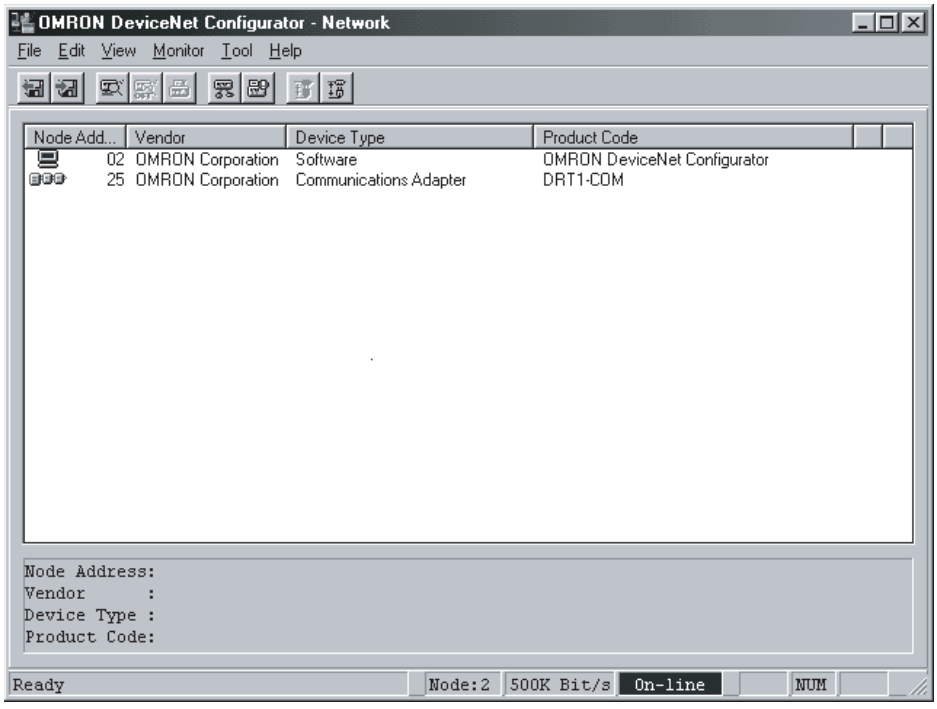


The Edit Device Parameters window for the Communications Unit that is double-clicked, will be displayed.

5. Click ***Set*** on the right of the Analog Output Unit to be set.
   ***Unit 1*** to ***Unit 8*** correspond to I/O Units #0 to #7.

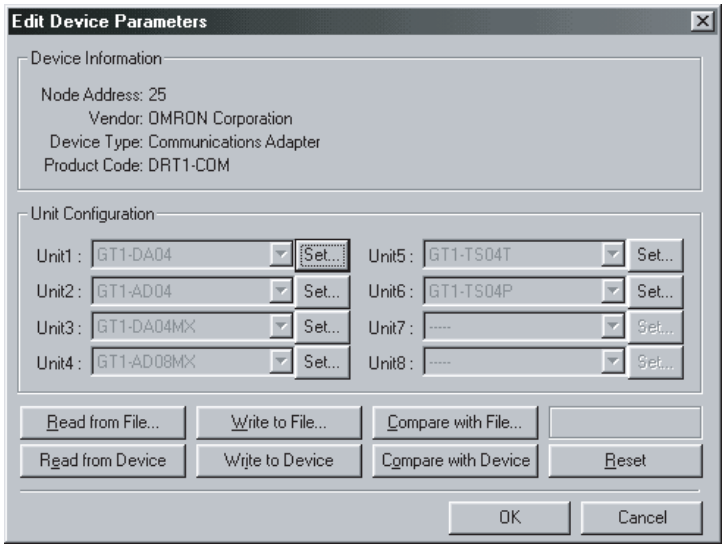


The Edit Unit Parameters window for the Analog Output Unit will be displayed.

6. Double-click the line for the setting to be changed, or alternatively, click ***Set Parameters*** once with the line selected.

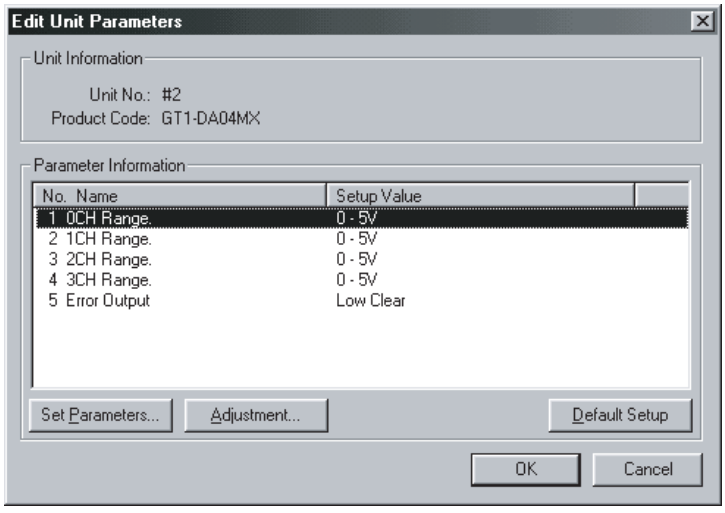


The Parameter Setting window will be displayed.

7. Select the new setting and click ***OK***.

**Output Range**

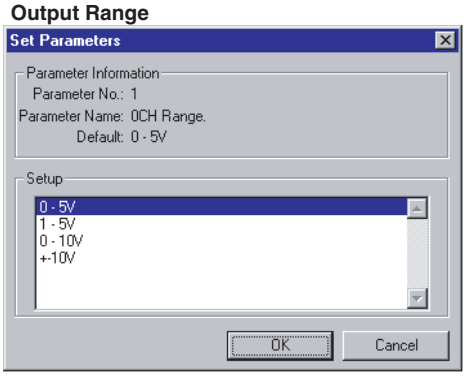


**output for communications errors (Error Output)**

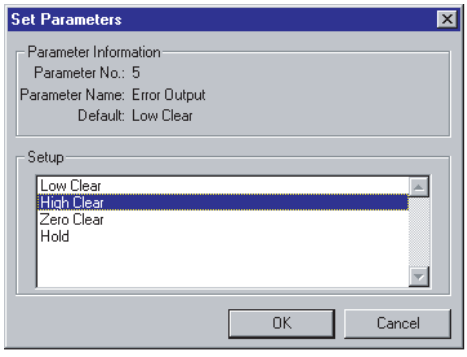


The output range will be set and the window for step 6 will appear again.

8. To change other output ranges, repeat steps 6 and 7.
9. When all the required output ranges have been changed, click ***OK*** in the Edit Unit Parameters window of the Analog Output Unit. The Edit Device Parameters window for the Communications Unit will appear again.
10. To make the settings for other I/O Units, repeat steps 5 to 9.
11. From the Edit Device Parameters window of the Communications Unit, click ***Write to Device***.

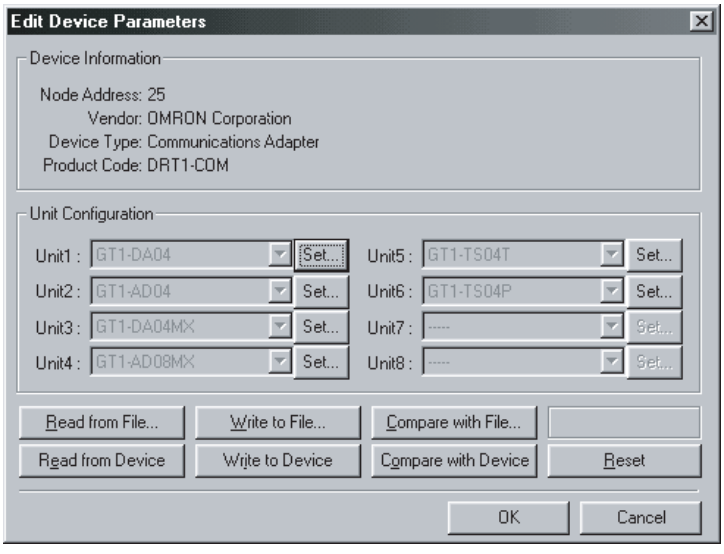


The specified output range and output for communications errors will be set for the Analog Output Unit. At this stage, however, the setting is not enabled.

12. From the Edit Device Parameters window of the Communications Unit, click ***Reset***.

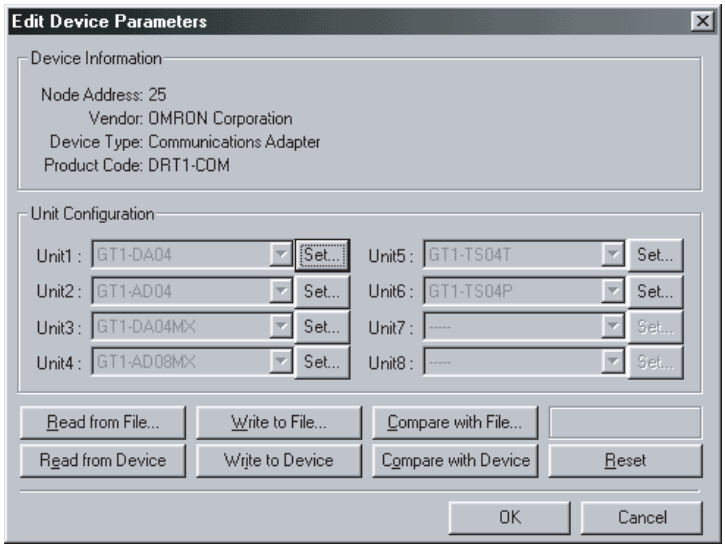


The Communications Unit and all the I/O Units connected to the Communications Unit will be reset, and the specified parameters (for example, for output range) will be enabled.

Note Even if ***Reset*** is not clicked and the power supply for the Communications Unit is switched OFF and ON again, the settings will be enabled.

**Adjusting Offset and Gain**

Use the following procedure to adjust the offset and gain settings. The DeviceNet and the MULTIPLE I/O TERMINAL must be connected first.

**Note**

1. The offset and gain can be adjusted only with a Configurator Ver. 1.20 or later.
2. With the earlier model GT1-DA04MX Analog Output Unit, the offset and gain cannot be adjusted, even with a Configurator Ver. 1.20 or later. Check the label on the front on the Unit for whether the offset and gain can be adjusted. Offset and gain can be adjusted only if the letter B appears on the label as shown below.

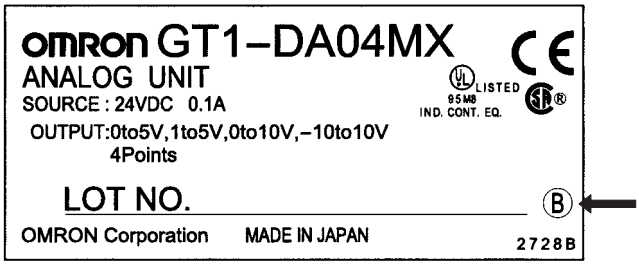


**Offset Adjustment**

Offset adjustment is used to adjust outputs so that when the value corresponding to 0% in the output range is written, it is converted accurately to output 0%. Offset adjustment is used when output voltage and output current differ from the actual value of 0% due to the features of the Unit or the method of connection being used.

E.g.: Output range is 0 to 10 V

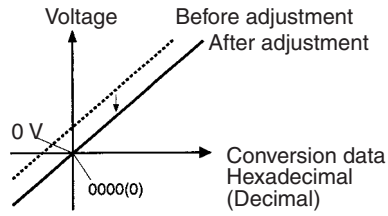


The possible range of offset adjustments depends on the output range. Refer to the following table.

| Output range | Data corresponding to 0% | Output corresponding to 0% | Adjustment range |
|---|---|---|---|
| 0 to 10 V | 0000 Hex (0) | 0 V | –0.5 to 0.5 V |
| –10 to 10 V | F448 Hex (–3000) | –10 V | –11.0 to –9.0 V |
| 1 to 5 V | 0000 Hex (0) | 1 V | 0.8 to 1.2 V |
| 0 to 5 V | 0000 Hex (0) | 0 V | –0.25 to 0.25 V |
| 4 to 20 mA (See note.) | 0000 Hex (0) | 4 mA | 3.2 to 4.8 mA |

Note An output range of 4 to 20 mA is possible only with the GT1-DA04.

If the output corresponding to 0% is outside the range of possible adjustments shown in the above table, check the connection to the output device.

**Gain Adjustment**

Gain adjustment is used to adjust the rate of fluctuation of output conversion values so that when the value corresponding to 100% in the output range is written, it is converted accurately to output 100%. Gain adjustment is used when the greater the output voltage and output current, the greater the difference from the actual value due to the features of the Unit or the method of connection being used.

E.g.: Input range is 0 to 10 V

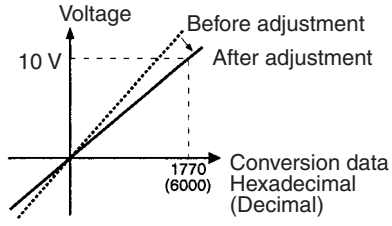


The possible range of gain adjustments depends on the output range. Refer to the following table.

| Output range | Data corresponding to 100% | Output corresponding to 100% | Adjustment range |
|---|---|---|---|
| 0 to 10 V | 1770 Hex (6000) | 10 V | 9.5 to 10.5 V |
| –10 to 10 V | 0BB8 Hex (3000) | 10 V | 9.0 to 11.0 V |
| 1 to 5 V | 1770 Hex (6000) | 5 V | 4.8 to 5.2 V |
| 0 to 5 V | 1770 Hex (6000) | 5 V | 4.75 to 5.25 V |
| 4 to 20 mA (See note.) | 1770 Hex (6000) | 20 mA | 19.2 to 20.8 mA |

Note An output range of 4 to 20 mA is possible with only the GT1-DA04.

If the output corresponding to 100% is outside the range of possible adjustments shown in the above table, review the connection to the output device.

**Adjustment Procedure**

***1,2,3...***

1. Connect the output device to the Analog Output Unit that is to be adjusted.
2. Turn ON the power supply to all the Units of the MULTIPLE I/O TERMINAL, including Analog Output Unit to be adjusted and the Communications Unit.
3. Connect the Configurator to the DeviceNet network and go online.
4. On the device list for the Configurator, the double-click Communications Unit to which the Analog Output Unit is connected.

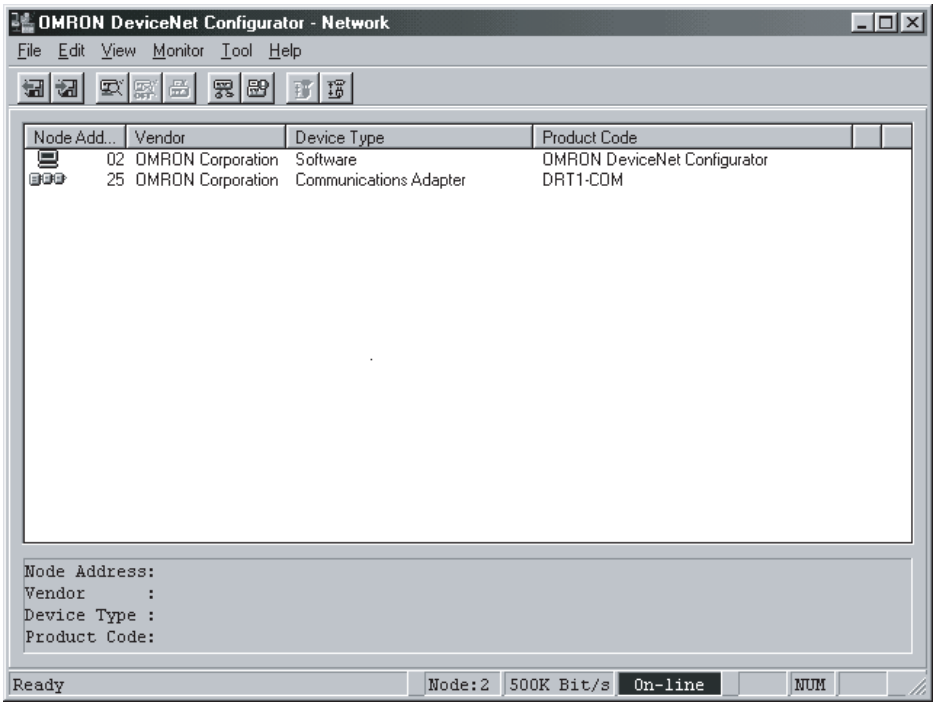


The Edit Device Parameters Window for the selected Communications Unit will be displayed.

5. Click ***Set*** on the right of the Analog Output Unit to be set. ***Unit 1*** to ***Unit 8*** correspond to I/O Units #0 to #7.

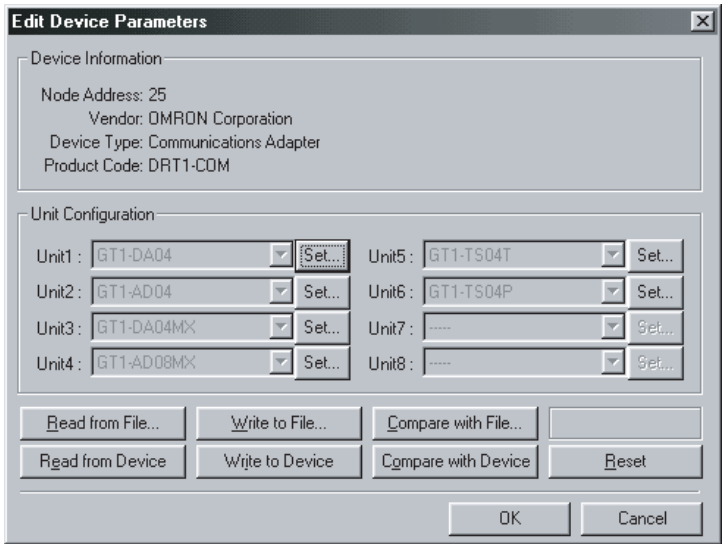

The Edit Unit Parameters Window for the Analog Output Unit will be displayed.

6. Click ***Adjustment***.

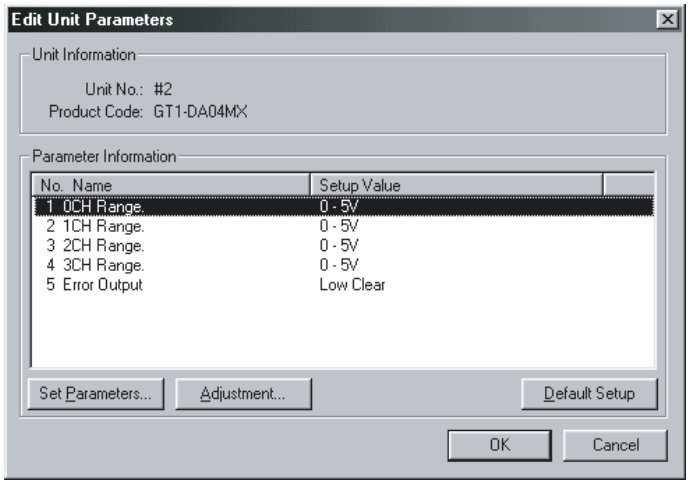


The Unit Adjustment Window will be displayed.

7. Click the Down Arrow and select the output words and the output range to be adjusted.

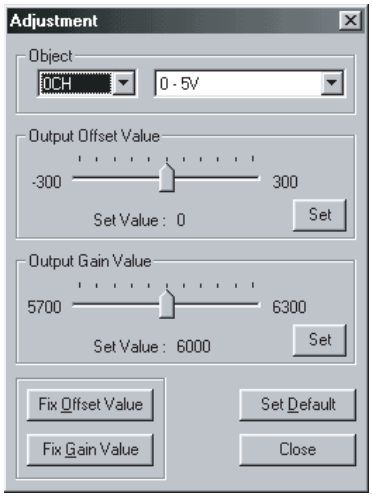


8. Drag the Offset Output Slide Bar to adjust the value, and then click ***Set***.

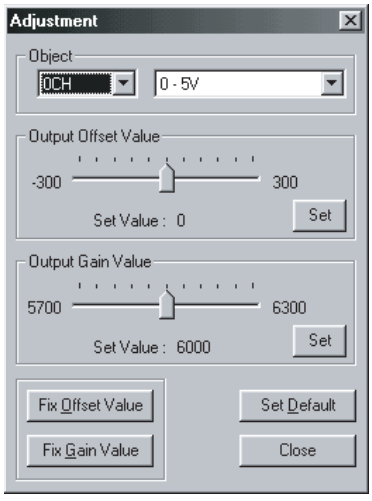

The voltage output or current output will be output on the output terminal on the Analog Output Unit designated in step 7. Adjust the slider bar until the output is correct for 0%.

9. Click ***Fix Offset Value*** when the voltage output or current output is correct for 0%.

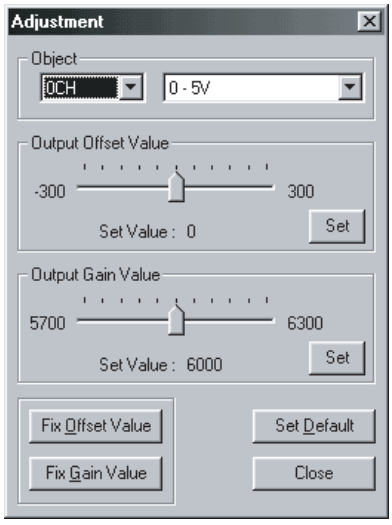


The offset value set using the slider bar will be stored in the EEPROM in the Analog Output Unit. Reset the Unit to enable the new setting.

10. Drag the Gain Output Slider Bar to adjust the value, then click ***Set***.

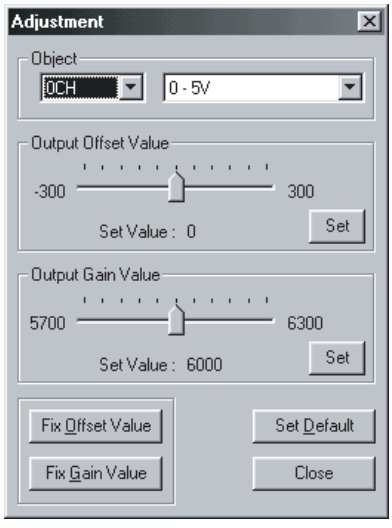


The voltage output or current output will be output on the output terminal on the Analog Output Unit designated in step 7. Adjust the slider bar until the output is correct for 100%.

11. Click ***Fix Gain Value*** when the voltage output or current output is correct for 100%.

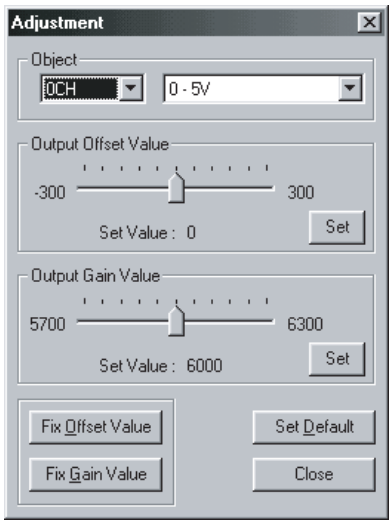


The gain value set using the slider bar will be stored in the EEPROM in the Analog Output Unit. Reset the Unit to enable the new setting.

12. Repeat steps 7 to 11 to adjust other outputs as necessary.
13. When you have completed all the adjustments, click ***Close***. A message asking if you want to reset will appear. Click ***Yes***. The Communications Unit and all I/O Units connected to it will be reset, and the new settings will be enabled.

**Clearing Offset and Gain Settings**

All offset and gain settings in the Analog Output Unit can be cleared at once. Use the following procedure to clear the offset and gain settings stored in the EEPROM in the Analog Output Unit. The DeviceNet and the MULTIPLE I/O TERMINAL must be connected first.

**Note** The offset and gain can be adjusted only with a Configurator Ver. 1.20 or later.

***1,2,3...***

1. Turn ON the power supply for all the Units of the MULTIPLE I/O TERMINAL, including the Communications Unit and the Analog Output Unit to be cleared.
2. Connect the Configurator to the DeviceNet network and go online.

3. On the device list for the Configurator, double-click the Communications Unit to which the Analog Output Unit is connected.

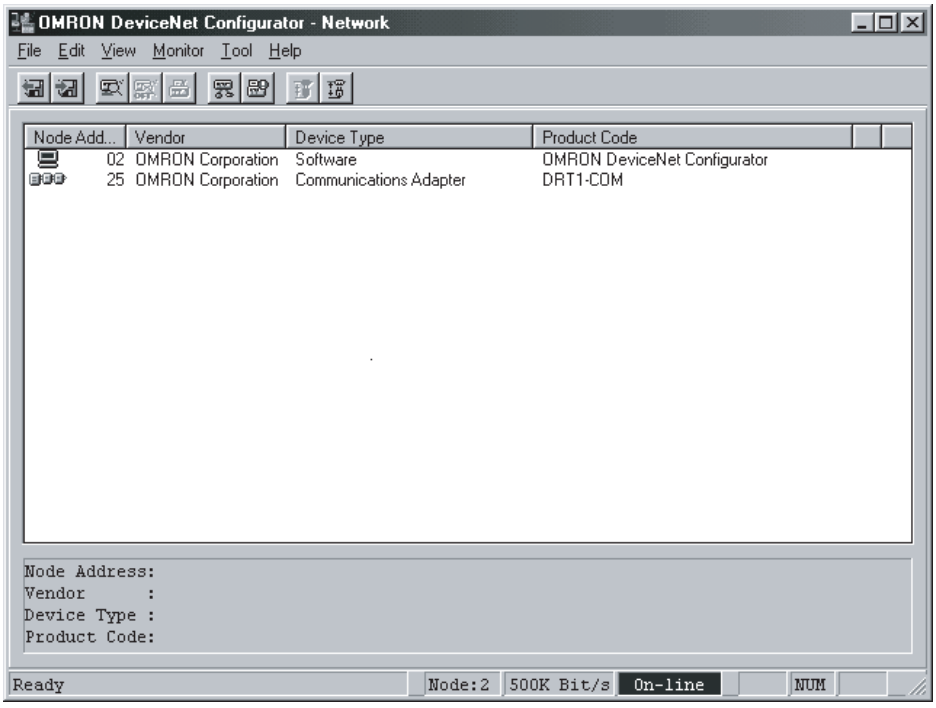


The Edit Device Parameters Window for the selected Communications Unit will be displayed.

4. Click ***Set*** on the right of the Analog Output Unit to be cleared. ***Unit 1*** to ***Unit 8*** correspond to I/O Units #0 to #7.

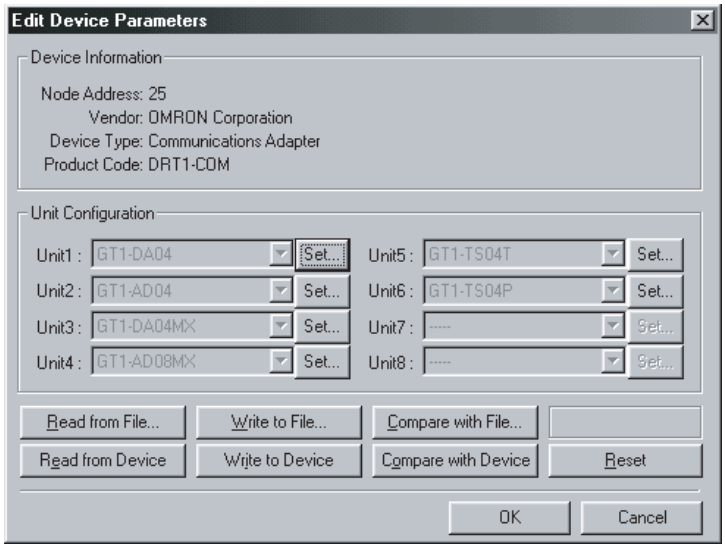


The Edit Unit Parameters Window for the Analog Output Unit will be displayed.

5. Click ***Adjustment***.

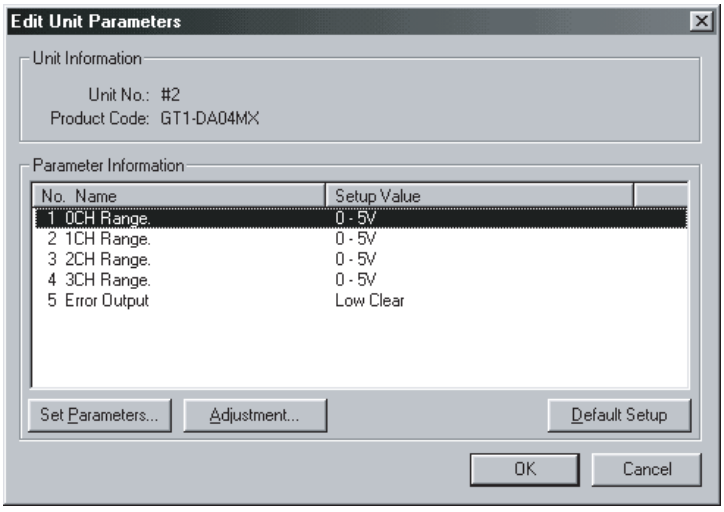


The Unit Adjustment Window will be displayed.

6. Click ***Set Default***.

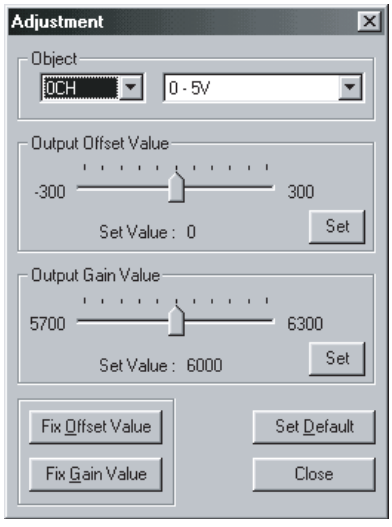


7. A message asking you to confirm will appear. Click ***Yes***.

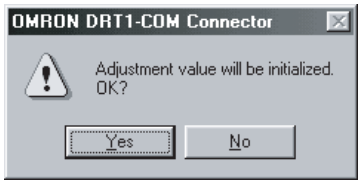


The offset and gain settings stored in the EEPROM in the Analog Output Unit will be reset to the default values. Reset the Unit to enable the default settings.

8. After clearing the adjustment settings, click ***Close***. A message asking if you want to reset will appear. Click ***Yes***. The Communications Unit and all I/O Units connected to it will be reset, and the default settings will be enabled.

# 5-3 GT1-TS04T and GT1-TS04P Temperature Input Units

## 5-3-1 Specifications

**General Specifications**

| Item | | Specification |
|---|---|---|
| I/O connections | | M3 terminal block |
| Number of inputs | | 4 points (Allocated 4 words or 8 words in the master. The number of allocated words can be set using the DIP switch.) |
| Internal power supply | Voltage range | 20.4 to 26.4 VDC (–15 to 10% at 24 VDC) |
| | Current consumption in Unit (inrush current) | 80 mA max.<br>(Inrush current 10 A max., pulse width 1 ms max.) |
| Current consumption (I/O Unit interface) | | 50 mA max. |
| Noise immunity | | ±2000 V<br>(IEC61000-4-4 via fast transient noise simulator) |
| Vibration resistance | | 10 to 150 Hz, 0.7-mm double amplitude or 50 $m/s^2$ |
| Shock resistance | | 150 $m/s^2$ |
| Ambient temperature | | –10°C to 55°C |
| Ambient humidity | | 25% to 85% (with no condensation) |
| Operating atmosphere | | No corrosive gases |
| Storage temperature | | –25°C to 65°C |
| Safety standards | | UL508, CSA22.2 |
| EMC directives | | EN50081-2, EN50082-2 |
| Mounting | | DIN 35-mm track |
| Weight | | Approx. 210 g |

**Characteristics**

| Item | Specification | |
|---|---|---|
| Model | GT1-TS04T | GT1-TS04P |
| Input type | R, S, K, J, T, B, L:<br>Switching possible | Pt100, JPt100:<br>Switching possible |
| Accuracy | (The larger of ±0.3% of the displayed value or ±1°C. See note.) ±1 digit max. | When the range is –200.0 to 650.0: (The larger of ±0.3% of the indicated value or 0.8°C) ±1 digit max.<br>When the range is –200.0 to 200.0: (The larger of ±0.3% of the indicated value or 0.5°C) ±1 digit max. |
| Conversion cycle | 250 ms / 4 points | |
| Temperature conversion data | Binary data (4-digit Hex.) | |
| Isolation method | Photocoupler isolation between inputs and communications lines<br>Photocoupler isolation between each temperature input signal | |

Note K or T below –100°C: ±2°C ±1 digit max.
L: ±2°C ±1 digit max.
R or S below 200°C: ±3°C ±1 digit max.
B below 400°C: No standard set

## Components

### GT1-TS04T

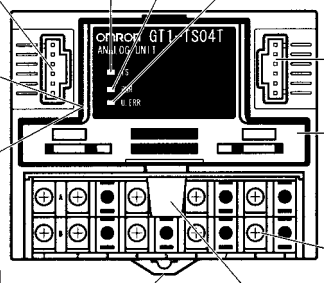


**TS Indicator** (Refer to page 200.)

Shows the communications status of the I/O Unit interface.

Normal communications: Lit green
I/O Unit interface error: Lit red
During initialization, or with no power supply: Not lit

**PWR Indicator**

Internal power being supplied: Lit green
No internal power supply: Not lit

**I/O Unit Interface Communications Connector 1**
(on the Communications Unit side)

**U. ERR Indicator** (Refer to page 201.)

Unit error: Lit red
Unit normal: Not lit

**Rotary switch**

On the left side of the cassette. Used to set the input type and input range.

**I/O Unit Interface Communications Connector 2**
(on the terminator side)

**Cassette** (Refer to page 207.)

Detach by pressing lightly on the upper part and pulling outwards.

**DIP Switch** (Refer to page 107.)

On the left side of the Cassette.

Pin 1: Temperature unit
Pin 2: Number of decimal places used
Pin 3: Reserved for system use (OFF)
Pin 4: Software setting enable/disable

**Terminal Block**

**DIN Track Mounting Hook**

**Cold Junction Compensator**

Compensates the input temperature.
Do not touch.

### GT1-TS04P

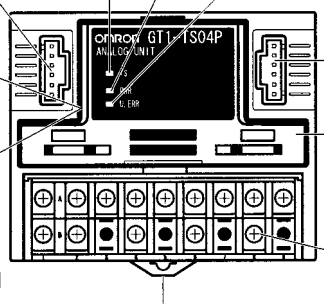


**TS Indicator** (Refer to page 200.)

Shows the communications status of the I/O Unit interface.

Normal communications: Lit green
I/O Unit interface error: Lit red
During initialization, or with no power supply: Not lit

**PWR Indicator**

Internal power being supplied: Lit green
No internal power supply: Not lit

**I/O Unit Interface Communications Connector 1**
(on the Communications Unit side)

**U. ERR Indicator** (Refer to page 201.)

Unit error: Lit red
Unit normal: Not lit

**Rotary switch**

On the left side of the cassette. Used to set the input type and input range.

**I/O Unit Interface Communications Connector 2**
(on the terminator side)

**Cassette** (Refer to page 207.)

Detach by pressing lightly on the upper part and pulling outwards.

**DIP Switch** (Refer to page 107.)

On the left side of the Cassette.

Pin 1: Temperature unit
Pin 2: Number of decimal places used
Pin 3: Reserved for system use (OFF)
Pin 4: Software setting enable/disable

**Terminal Block**

**DIN Track Mounting Hook**

**DIP Switch and Rotary Switch Settings**

The DIP switch and rotary switch are located on the left side of the cassette on the Temperature Input Units (GT1-TS04T/TS04P). Remove the cassette from the Unit to set the DIP switch and rotary switch.

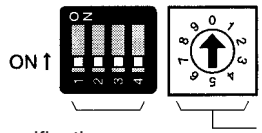


Operating specifications
Temperature units
Number of decimal places used
Software setting enable/disable

Input type
Input range

**Note** Before detaching or attaching the Cassette or making DIP switch or rotary switch settings, be sure that the power supply to the I/O Unit (including power supply to I/O Unit interface) is OFF.

**Operating Specification Settings**

| DIP switch | Function | Setting | Setting contents |
|---|---|---|---|
| 1 | Temperature unit | OFF | °C (factory-set) |
| | | ON | °F |
| 2 | Number of decimal places used (refer to *Converted Data* on page 153) | OFF | Normal Mode (0 or 1 digit after the decimal point, depending on the input) (factory-set) |
| | | ON | 2-decimal-place Mode |
| 3 | Reserved for system use | OFF | Must be set to OFF (factory-set). |
| 4 | Software setting enable/ disable | OFF | Set the input range using the rotary switch (factory-set). |
| | | ON | Set the input range using the Configurator. (See note.) |

**Note**
1. When setting the input range using a DeviceNet Configurator, use version 1.20 or later. If pin 4 is ON, and the Configurator is not used to make the settings, all input ranges will be set to K (–200 to 1300°C) or Pt100 (–200 to 650°C).
2. If input ranges are set using the Configurator (version 1.20 or later), it is possible to make different settings for each point.

**Input Type and Input Range Settings**

The following input types and input ranges are determined by the number set on the rotary switch. The input type and input range made using the rotary switch are the same for all 4 input points.

**GT1-TS04T**

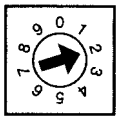


| Number | Input type | Range (°C) | Range (°F) |
|---|---|---|---|
| 0 | R | 0 to 1700 | 0 to 3000 |
| 1 | S | 0 to 1700 | 0 to 3000 |
| 2 (factory-set) | K | –200 to 1300 | –300 to 2300 |
| 3 | K | 0.0 to 500.0 | 0.0 to 900.0 |
| 4 | J | –100 to 850 | –100 to 1500 |
| 5 | J | 0.0 to 400.0 | 0.0 to 750.0 |
| 6 | T | –200.0 to 400.0 | –300.0 to 700.0 |
| 7 | L | –100 to 850 | –100 to 1500 |
| 8 | L | 0.0 to 400.0 | 0.0 to 750.0 |
| 9 | B | 100 to 1800 | 300 to 3200 |

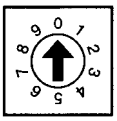


**GT1TS04P**

| Number | Input type | Range (°C) | Range (°F) |
|---|---|---|---|
| 0 (factory-set) | Pt100 | –200.0 to 650.0 | –300.0 to 1200.0 |
| 1 | JPt100 | –200.0 to 650.0 | –300.0 to 1200.0 |
| 2 | Pt100 | –200.0 to 200.0 | –300.0 to 380.0 |
| 3 | JPt100 | –200.0 to 200.0 | –300.0 to 380.0 |
| 4 to 9 | Cannot be set | | |

**Terminal Arrangement**

**GT1-TS04T**

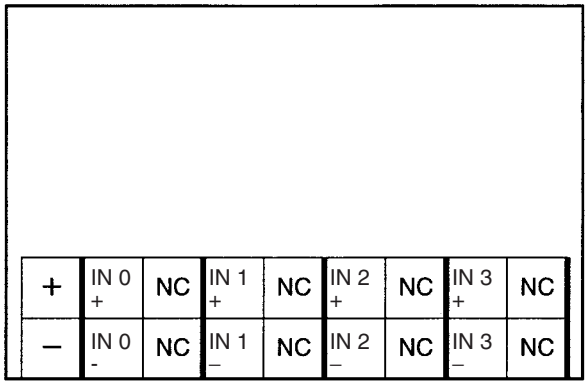


**GT1-TS04P**

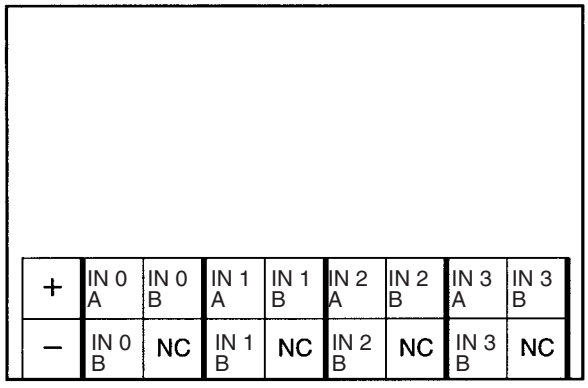


**Wiring**

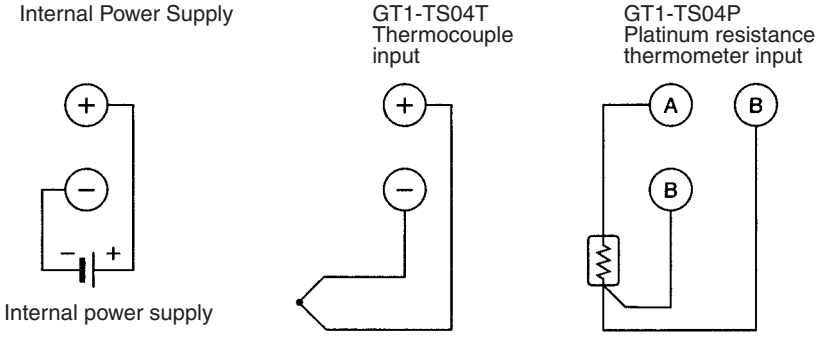

**Converted Data**

**Normal Mode**

The input temperature data is converted into 4-digit hexadecimal (binary) data and stored in one of the four words in the Master allocated to temperature input as shown below.

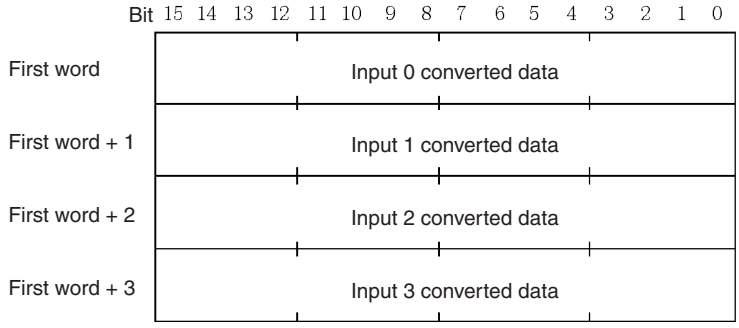


If the converted data is a negative number, it is stored as a two's complement. Data for range codes that include one digit after the decimal point are stored without the decimal point, i.e., 10 times the actual value is stored. Some examples are provided in the following table.

| Input | | Data conversion examples |
|---|---|---|
| Unit: 1° | K (0.0 to 500.0°C),<br>J (0.0 to 400.0°C),<br>T and L (0.0 to 400.0°C),<br>Pt100, JPt100 | 850° → 0352 Hex<br>–200° → FF38 Hex |
| Unit: 0.1° | R, S, K (–200 to 1300°C),<br>J (–100 to 850°C),<br>L (–100 to 850°C),<br>B | ×10 500.0° → 5000 → 1388 Hex<br>–20.0° → –200 → FF38 Hex<br>–200.0° → –2000 → F830 Hex |

**Two-decimal-point Mode**

The input temperature data for all input types and input ranges is sent to the Master as a value with 2 digits after the decimal point. The value of the temperature data is multiplied by 100 and converted to 8-digit hexadecimal digital (double-precision binary) data. If the converted data is a negative number, it is expressed as a two's complement. The four input points are allocated eight words in the Master as shown below.

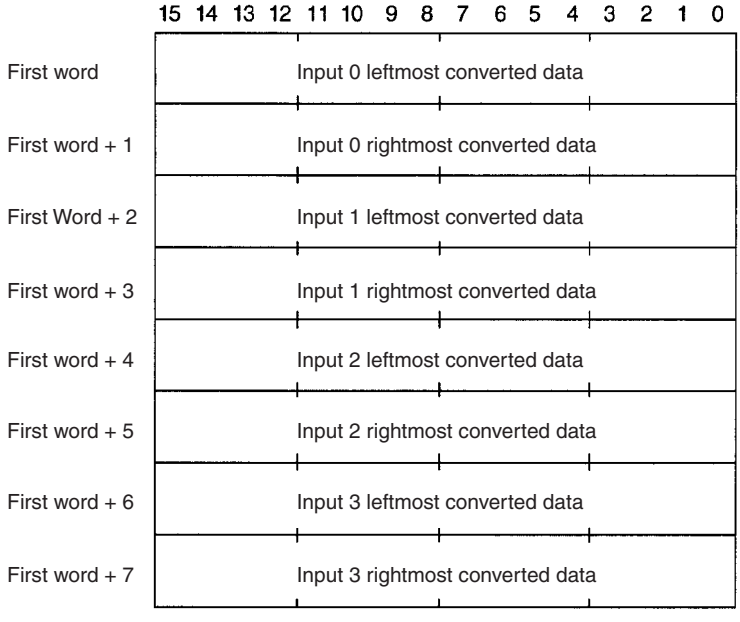


Example: 850.00°C x 100 = 85000; Converted to binary = 00014C08 Hex. Thus, leftmost data: 4C08 Hex., and rightmost data: 0001 Hex.

–200.00°C x 100 = –20000; Converted to binary = FFFFB1E0 Hex.
Thus, leftmost data: B1E0 Hex., and rightmost data: FFFF Hex.

**Note** In 2-decimal-place Mode, temperature data as far as two digits after the decimal point is converted to binary data, but the actual resolution is not 0.01°C (°F). For this reason, there may be skipping and inaccuracies in the first and second digits after the decimal point (0.1 and 0.01). Treat any resolution above that specified for the normal data format as reference data.

### Data Range and Open-circuit Detection Function

The range of data that can be converted depends on the number set using the rotary switch, as follows:

**GT1-TS04T**

| Number | Input range | Range (°C) | Range (°F) |
|---|---|---|---|
| 0 | R | –20 to 1720 | –20 to 3020 |
| 1 | S | –20 to 1720 | –20 to 3020 |
| 2 (factory-set) | K | –220 to 1320 | –320 to 2320 |
| 3 | K | –20.0 to 520.0 | –20.0 to 920 |
| 4 | J | –120 to 870 | –120 to 1520 |
| 5 | J | –20.0 to 420.0 | –20.0 to 770.0 |
| 6 | T | –220.0 to 420.0 | –320.0 to 720.0 |
| 7 | L | –120 to 870 | –120 to 1520 |
| 8 | L | –20.0 to 420.0 | –20.0 to 770.0 |
| 9 | B | 80 to 1820 | 280 to 3220 |

**GT1-TS04P**

| Number | Input range | Range (°C) | Range (°F) |
|---|---|---|---|
| 0 (factory-set) | Pt100 | –220.0 to 670.0 | –320.0 to 1220.0 |
| 1 | JPt100 | –220.0 to 670.0 | –320.0 to 1220.0 |
| 2 | Pt100 | –220.0 to 220.0 | –320.0 to 400.0 |
| 3 | JPt100 | –220.0 to 220.0 | –320.0 to 400.0 |
| 4 to 9 | Cannot be set | | |

If the input temperature exceeds the possible conversion range, the converted data will be fixed at the upper or lower limit. If the input temperature falls outside the range of possible conversions by more than a specific value, the input wiring will be assumed to be open, the open-circuit detection function will be triggered, and the converted data will be 7FFF Hex. The open-circuit detection function will also be triggered if there is an error in the cold junction compensator. Once the conversion data returns to within the possible range, the open-circuit detection function will be automatically be cleared, and normal conversion data restored.

### Mounting

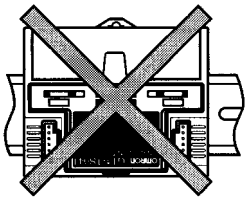

Do not mount the GT1-TS04T as shown on the left.
If the Unit is mounted in this orientation, it may not provide the required accuracy.

Vertical mounting

**Dimensions**

The illustration below shows the GT1-TS04T. The dimensions for the GT1-TS04P are the same.

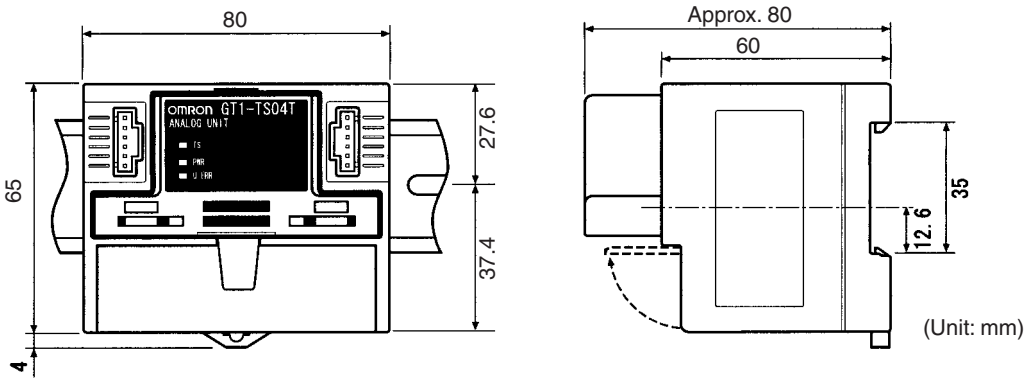


**Note** The vertical center of the Unit is 4.9 mm lower than the center of the DIN track. The Unit therefore extends downward 41.4 mm (including the mounting hook) from the DIN track center.

## 5-3-2 Settings Using the Configurator

Use Ver. 1.20 or later of the DeviceNet Configurator (referred to as the Configurator below) to make the following settings and adjustments.

- Setting the input range (page 154)
- Calibrating the Temperature Input Unit (GT1-TS04T: page 158; GT1-TS04P: page 162)
- Checking accuracy (page 165)
- Clearing calibrated data (page 169)

**Input Range Setting**

Use the following procedure to set the input range. the DeviceNet and the MULTIPLE I/O TERMINAL must be connected first.

**Note** The input range can be set for each point using the Configurator. Ranges can be set in 4-point units by setting DIP switches.

***1,2,3...***

1. Turn ON pin 4 on the DIP switch to enable software settings.
2. Turn ON the power supply to all the Units of the MULTIPLE I/O TERMINAL, including the Temperature Input Unit to be set and the Communications Unit.
3. Connect the Configurator to the DeviceNet network and go online.

4. On the device list for the Configurator, double-click the Communications Unit to which the Temperature Input Unit is connected.

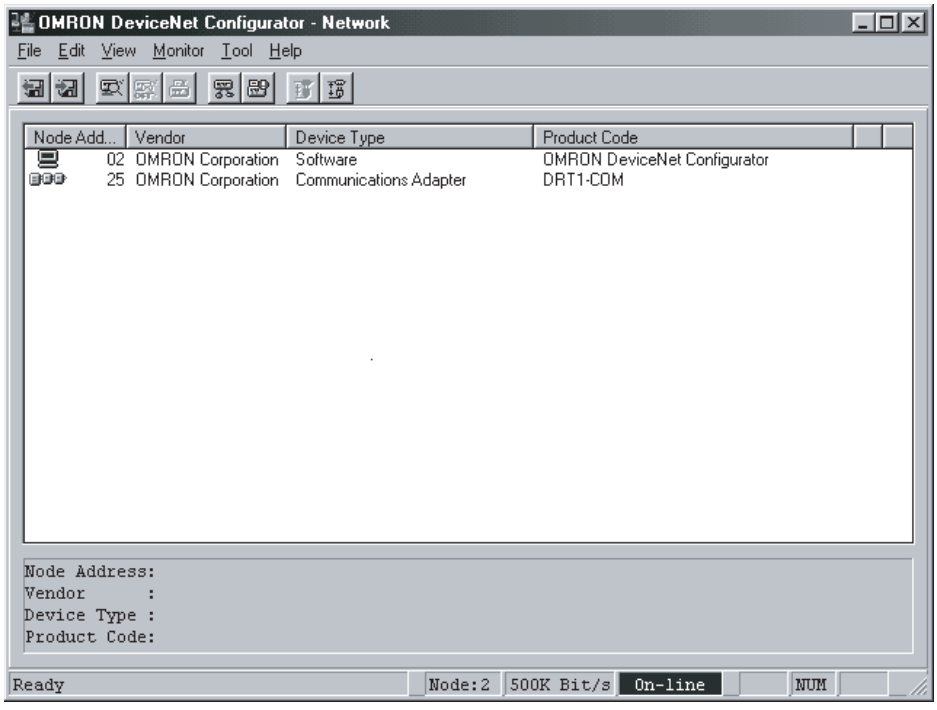


The Edit Device Parameters Window for the selected Communications Unit will be displayed.

5. Click ***Set*** on the right of the Temperature Input Unit to be set. ***Unit 1*** to ***Unit 8*** correspond to I/O Units #0 to #7.

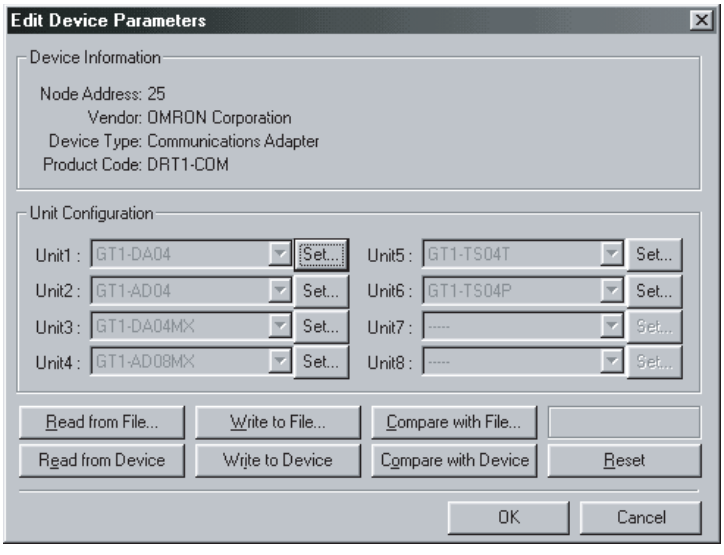


The Edit Unit Parameters Window for the Temperature Input Unit will be displayed.

6. Double-click the line for the input range to be changed or, alternatively, click ***Set Parameters*** once with the line selected.

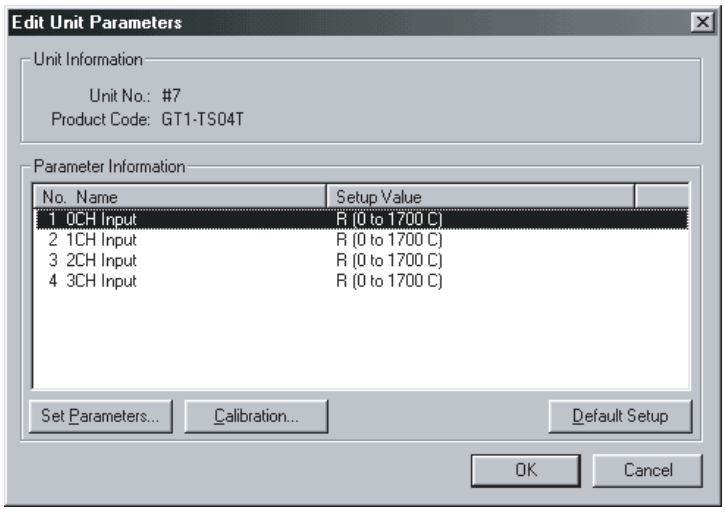


The Parameter Setting Window will be displayed.

7. Select the desired input range and click ***OK***.

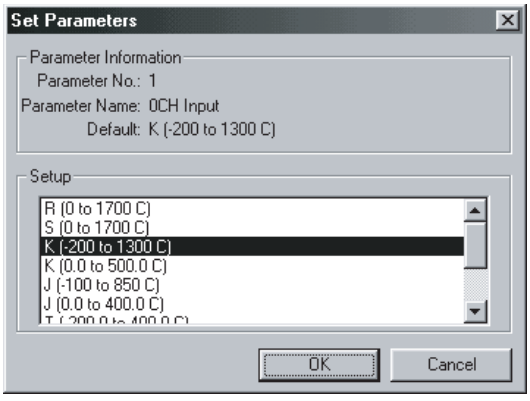


The input range will be set and the window for step 6 will appear again.

8. To change other input ranges, repeat steps 6 and 7.
9. When all the required input ranges have been set, click ***OK*** in the Edit Unit Parameters Window for the Temperature Input Unit. The Edit Device Parameters Window for the Communications Unit will appear again.
10. To make the settings for other I/O Units, repeat steps 5 to 9.

11. From the Edit Device Parameters Window for the Communications Unit, click ***Write to Device***.

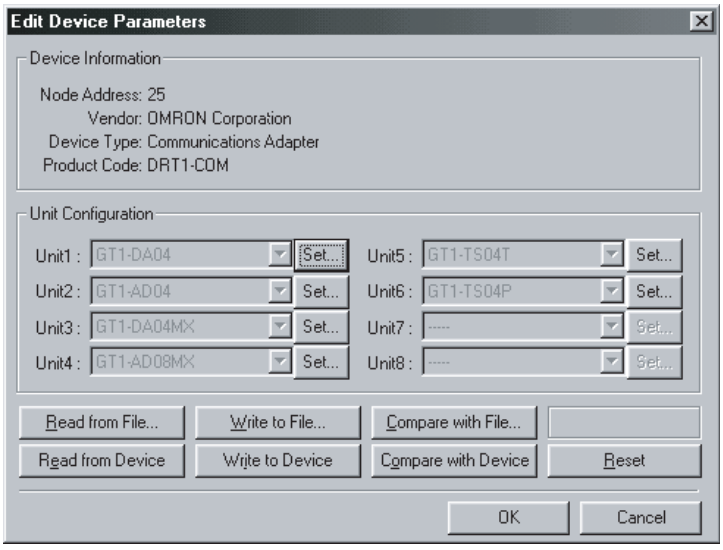


The specified input ranges will be set in the Temperature Input Unit. At this stage, however, the settings are not enabled.

12. From the Edit Device Parameters Window for the Communications Unit, click ***Reset***.

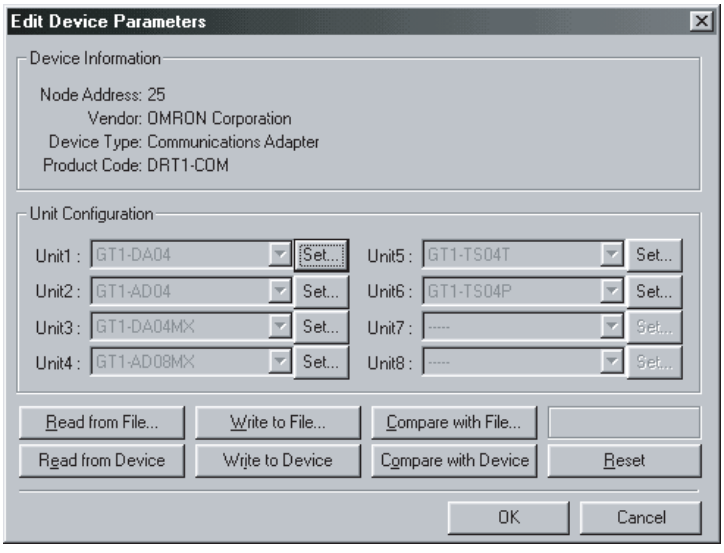


The Communications Unit and all the I/O Units connected to the Communications Unit will be reset, and the specified parameters (for example, for input ranges) will be enabled.

Note The settings will be enabled when the power supply to the Communications Unit is turned OFF and ON again even if ***Reset*** is not clicked at this time.

**Calibrating the GT1-TS04T** Use the following procedure to calibrate the GT1-TS04T. The DeviceNet and the MULTIPLE I/O TERMINAL must be connected first.

**Note** The Temperature Input Unit is correctly calibrated before being shipped from the factory, and calibration is not necessary for normal operation. Calibrate the Unit only if absolutely necessary. OMRON is not responsible for the results of any user-set calibrations. If the manual calibrations fail, clear the calibration to restore the Unit to the default settings.

***1,2,3...*** 1. Connect the external devices to the Temperature Input Unit that is to be calibrated.

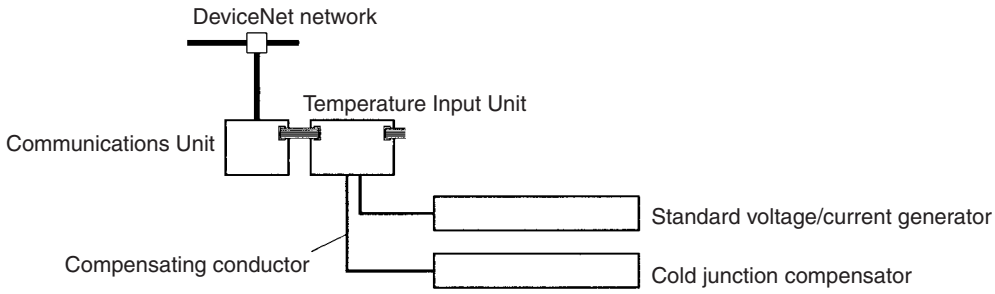


a) Compensation (Parallel)

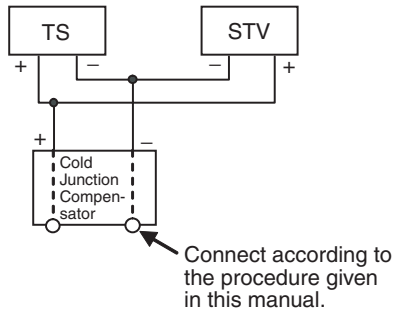


b) Inspection (Series)

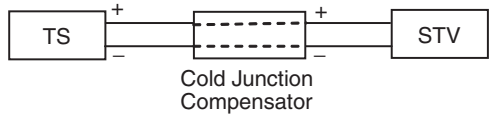


STV: Reference voltage current generator

Use a calibrated thermocouple in a cold junction compensator and a compensating conductor. If using an R, S, or B thermocouple, a K thermocouple can be used instead. Set the cold junction compensator to 0°C, but disable the setting (i.e., keep the contact open) until the bias compensation described in step 10 is completed. Do not touch the Temperature Input Terminal or the compensating conductors.

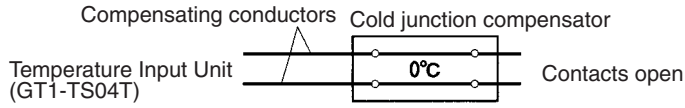


2. Turn ON the power supply to all the Units of the MULTIPLE I/O TERMINAL, including the Temperature Input Unit to be calibrated and the Communications Unit. Wait approximately 30 minutes until the internal temperature of the Temperature Input Unit has stabilized.
3. Connect the Configurator to the DeviceNet network and go online.

4. On the device list for the Configurator, double-click the Communications Unit to which the Temperature Input Unit is connected.

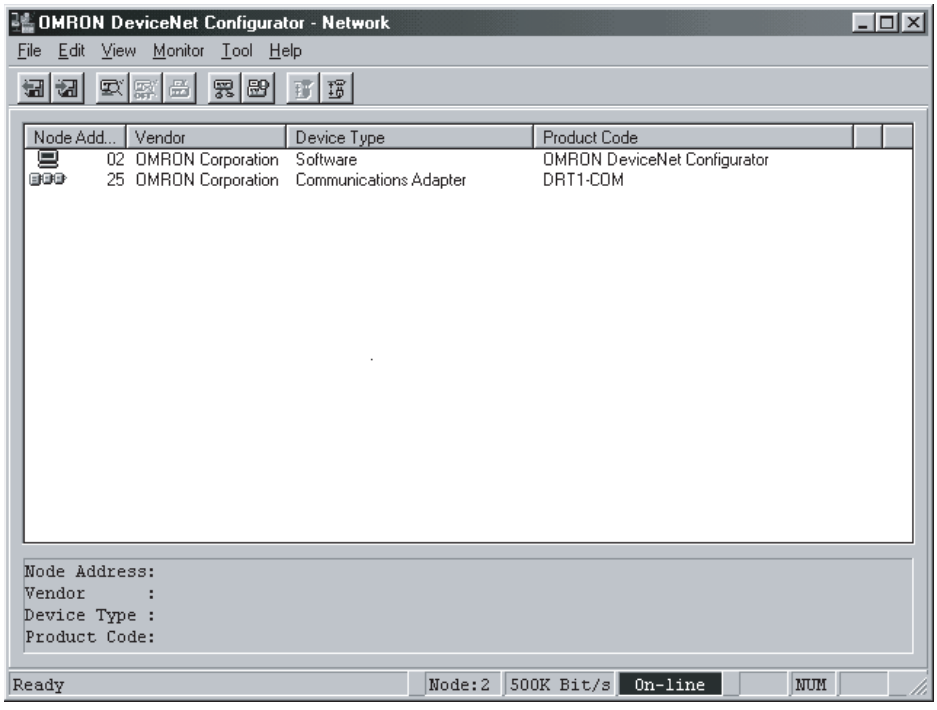


The Edit Device Parameters Window for the selected Communications Unit will be displayed.

5. Click ***Set*** on the right of the Temperature Input Unit to be set. ***Unit 1*** to ***Unit 8*** correspond to I/O Units #0 to #7.

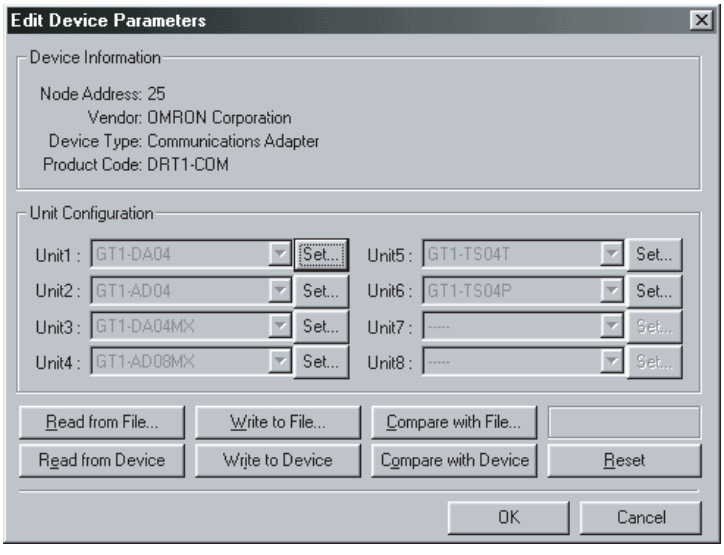


The Edit Unit Parameters Window for the Temperature Input Unit will be displayed.

6. Click ***Calibration***.

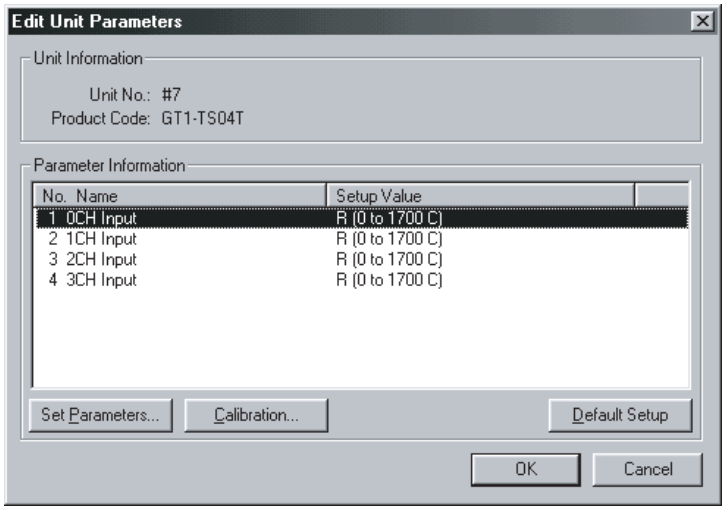


The Calibrate Unit Window will be displayed. At this time, the GT1-TS04T will enter Calibration Mode. While in Calibration Mode, temperature data sent to the Master will be 7FFF Hex. (7FFFFFFF Hex if in 2–decimal-place Mode). Exit the Calibration Mode by resetting the MULTIPLE I/O TERMINAL, or by turning the power OFF and ON again, to return to normal operating conditions.

7. Click the Down Arrow and select the input words, the input type, and the input range to be calibrated.

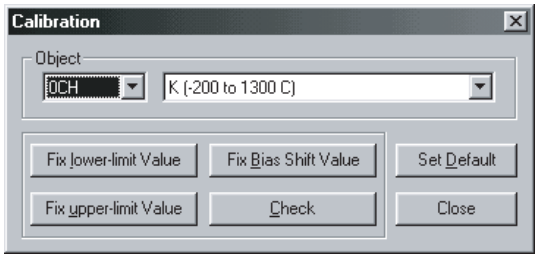


8. Calibrate the lower limit. Apply 0 mV to the input terminal (as selected in step 7) on the Temperature Input Unit from the standard voltage/current generator. Wait approximately 1 minute for the input to stabilize, then click ***Fix lower-limit Value***.

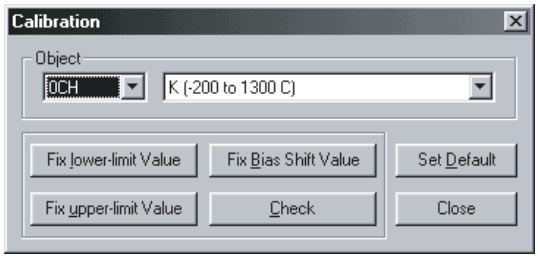


The calibrated lower limit will be stored in the EEPROM in the Temperature Input Unit.

9. Calibrate the upper limit. Apply the voltage corresponding to the input type and input range as shown in the following table to the input terminal (as se-

lected in step 7) on the Temperature Input Unit from the standard voltage/current generator.

| Input type | Range (°C) | Range (°F) | Input voltage |
|---|---|---|---|
| R | 0 to 1700 | 0 to 3000 | 20 mV |
| S | 0 to 1700 | 0 to 3000 | 20 mV |
| K | –200 to 1300 | –300 to 2300 | 50 mV |
| K | 0.0 to 500.0 | 0.0 to 900.0 | 20 mV |
| J | –100 to 850 | –100 to 1500 | 50 mV |
| J | 0.0 to 400.0 | 0.0 to 750.0 | 20 mV |
| T | –200.0 to 400.0 | –300.0 to 700.0 | 20 mV |
| L | –100 to 850 | –100 to 1500 | 50 mV |
| L | 0.0 to 400.0 | 0.0 to 750.0 | 20 mV |
| B | 100 to 1800 | 300 to 3200 | 20 mV |

Wait approximately 1 minute for the input to stabilize, then click ***Fix upper-limit Value***.

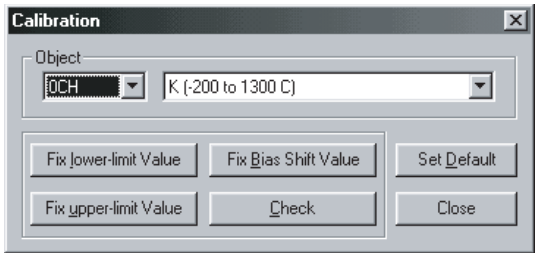


The calibrated upper limit will be stored in the EEPROM in the Temperature Input Unit.

10. Compensate for bias. Turn OFF the standard voltage/current generator, and enable the cold junction compensator (close the contacts) as shown below. Check that the cold junction compensator is functioning at 0°C.

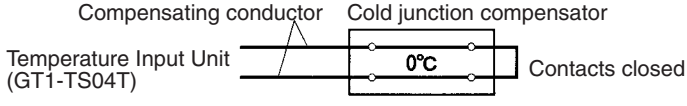


With sensors R, S, and B, the margin of error at close to 0°C is great, so set the input type to a K thermocouple to compensate. Wait approximately 40 minutes for the temperature to stabilize, then click ***Fix Bias Shift Value***.

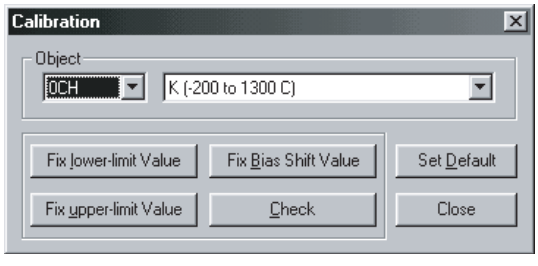


The bias compensation will be stored in the EEPROM in the Temperature Input Unit.

11. Repeat steps 7 to 10 to adjust other inputs as necessary.

12. When you have completed all the adjustments, click ***Close***.

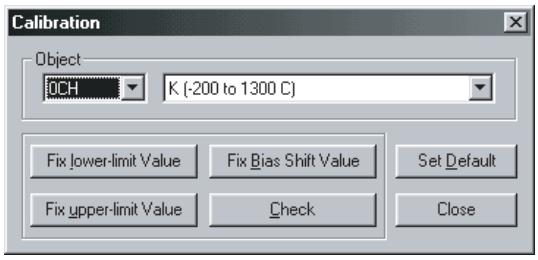


A message asking if you want to reset will appear. Click ***Yes***. The Communications Unit and all I/O Units connected to it will be reset, and the Unit will return to normal operating mode from Calibration Mode. The Edit Unit Parameters Window for the Temperature Input Unit will be displayed.

Note When calibrating the Temperature Input Unit, the calibration data will be stored in the Temperature Input Unit and enabled when it is set.

**Calibrating the GT1-TS04P**

Use the following procedure to calibrate the GT1-TS04P. The DeviceNet and the MULTIPLE I/O TERMINAL must be connected first.

**Note** The Temperature Input Unit is correctly calibrated before being shipped from the factory, and calibration is not necessary for normal operation. Calibrate the Unit only if absolutely necessary. OMRON is not responsible for the results of any user-set calibrations. If the manual calibrations fail, clear the calibration to restore the Unit to the default settings.

***1,2,3...***

1. Connect a 6-dial precision resistance box to the Temperature Input Unit that is to be calibrated.

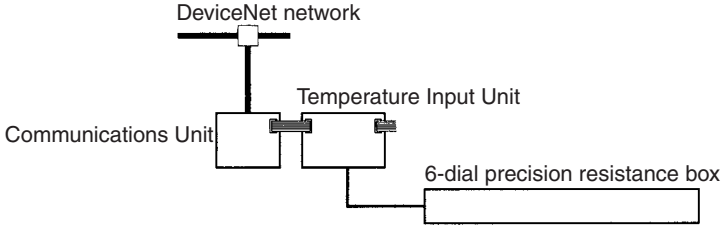


2. Turn ON the power supply to all the Units of the MULTIPLE I/O TERMINAL, including the Temperature Input Unit to be calibrated and the Communications Unit. Wait approximately 30 minutes until the internal temperature of the Temperature Input Unit has stabilized.
3. Connect the Configurator to the DeviceNet network and go online.

4. On the device list for the Configurator, double-click the Communications Unit to which the Temperature Input Unit is connected.

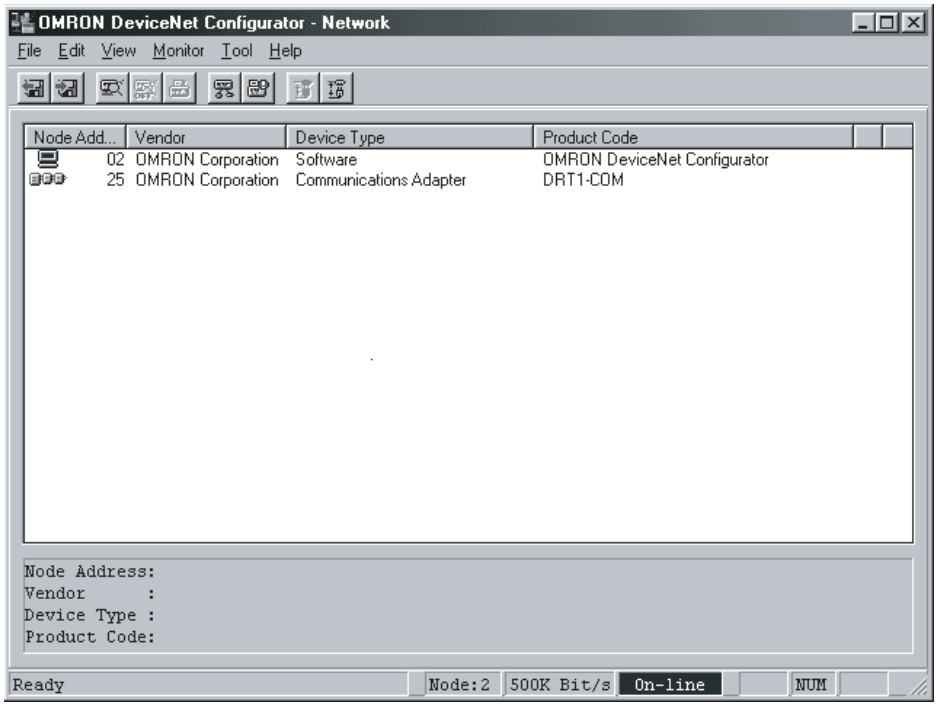


The Edit Device Parameters Window for the selected Communications Unit will be displayed.

5. Click ***Set*** on the right of the Temperature Input Unit to be set. ***Unit 1*** to ***Unit 8*** correspond to I/O Units #0 to #7.

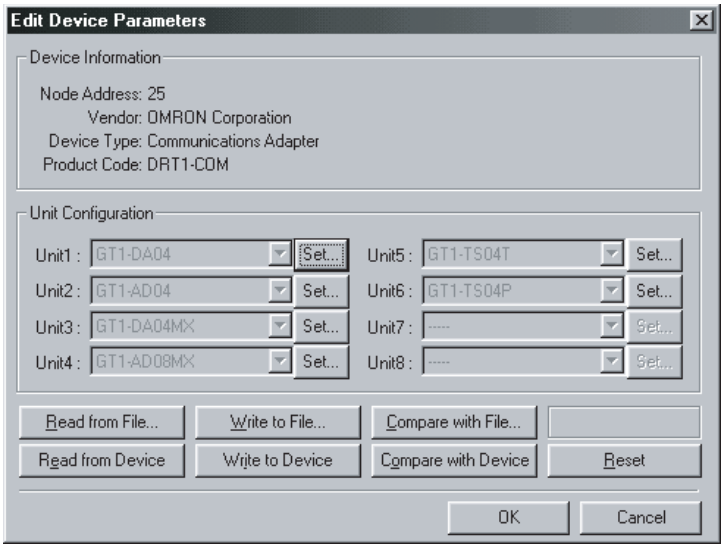


The Edit Unit Parameters Window for the Temperature Input Unit will be displayed.

6. Click ***Calibration***.

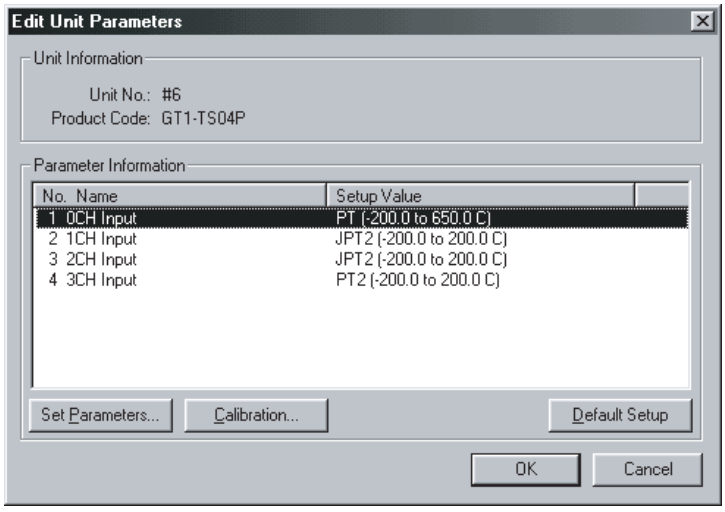


The Calibrate Unit Window will be displayed. At this time, the GT1-TS04P will enter Calibration Mode. While in Calibration Mode, temperature data sent to the Master will be 7FFF Hex. (7FFFFFFF Hex if in 2-decimal-place Mode). Exit the Calibration Mode by resetting the MULTIPLE I/O TERMINAL, or by turning the power OFF and ON again, to return to normal operating conditions.

7. Click the Down Arrow to select the input words, the input type, and the input range to be calibrated.

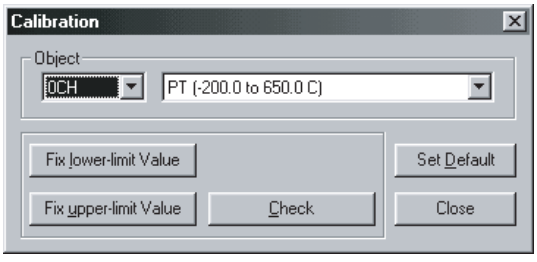


8. Calibrate the lower limit. Apply18 Ω to the input terminal (as selected in step 7) on the Temperature Input Unit from the 6-dial precision resistance box. Wait approximately 1 minute for the input to stabilize, then click ***Fix lower-limit Value***.

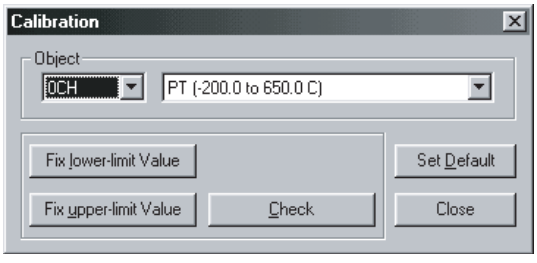


The calibrated lower limit will be stored in the EEPROM in the Temperature Input Unit.

9. Calibrate the upper limit. Apply the resistance corresponding to the input type and input range as shown in the following table to the input terminal (as selected in step 7) on the Temperature Input Unit from the 6-dial precision resistance box.

| Input type | Range (°C) | Range (°F) | Input resistance |
|---|---|---|---|
| Pt100 | –200.0 to 650.0 | –300.0 to 1200.0 | 330 Ω |
| JPt100 | –200.0 to 650.0 | –300.0 to 1200.0 | 330 Ω |
| Pt100 | –200.0 to 200.0 | –300.0 to 380.0 | 180 Ω |
| JPt100 | –200.0 to 200.0 | –300.0 to 380.0 | 180 Ω |

Wait approximately 1 minute for the input to stabilize, then click ***Fix upper-limit Value***.

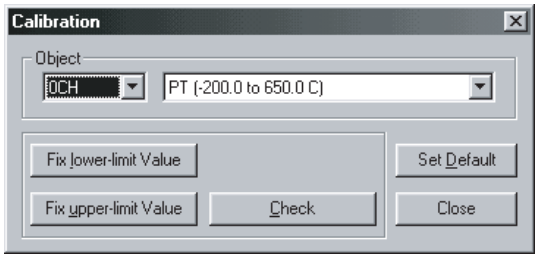


The calibrated upper limit will be stored in the EEPROM in the Temperature Input Unit.

10. Repeat steps 7 to 9 to adjust other inputs as necessary.
11. When you have completed all the adjustments, click ***Close***. A message asking if you want to reset will appear. Click ***Yes***. The Communications Unit and all I/O Units connected to it will be reset, and the Unit will return to normal operating mode from Calibration Mode.

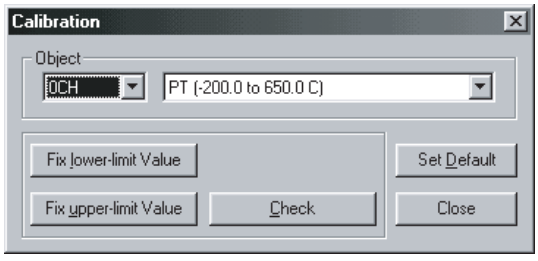


The Edit Unit Parameters Window for the Temperature Input Unit will be displayed.

Note When calibrating the Temperature Input Unit, the calibration data will be stored in the Temperature Input Unit and enabled when it is set.

**Checking Accuracy**

Be sure to check accuracy after enabling the calibration. During the accuracy check, be sure to check the lower limit, median value, and upper limit. Use the following procedure to check the accuracy. the DeviceNet and the MULTIPLE I/O TERMINAL must be connected first.

***1,2,3...***

1. Connect the external devices to the Temperature Input Unit to be checked, as shown below.

**GT1-TS04T**

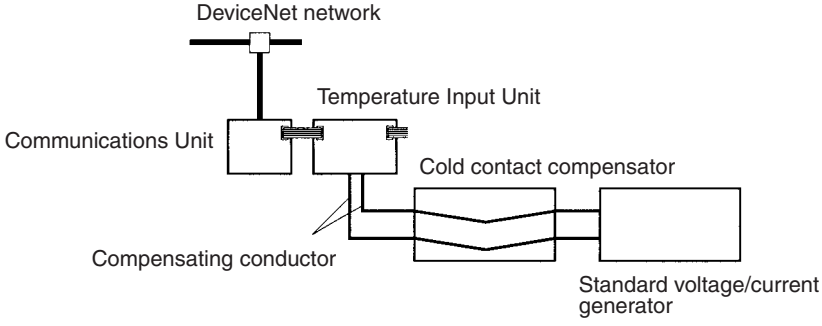

Use a calibrated thermocouple in the cold junction compensator and a compensating conductor, and set the cold junction compensator to 0°C.

**GT1-TS04P**

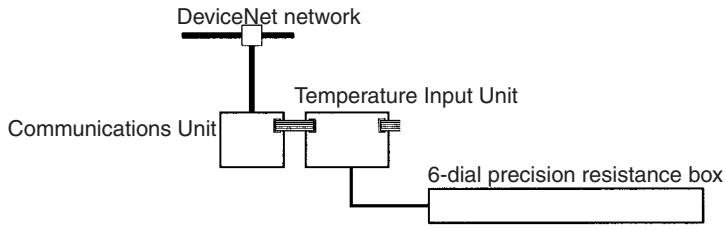


2. Turn ON the power supply to all the Units of the MULTIPLE I/O TERMINAL, including the Temperature Input Unit to be checked and the Communications Unit. Wait approximately 30 minutes until the internal temperature of the Temperature Input Unit has stabilized.
3. Connect the Configurator to the DeviceNet network and go online.
4. On the device list for the Configurator, double-click the Communications Unit to which the Temperature Input Unit is connected.

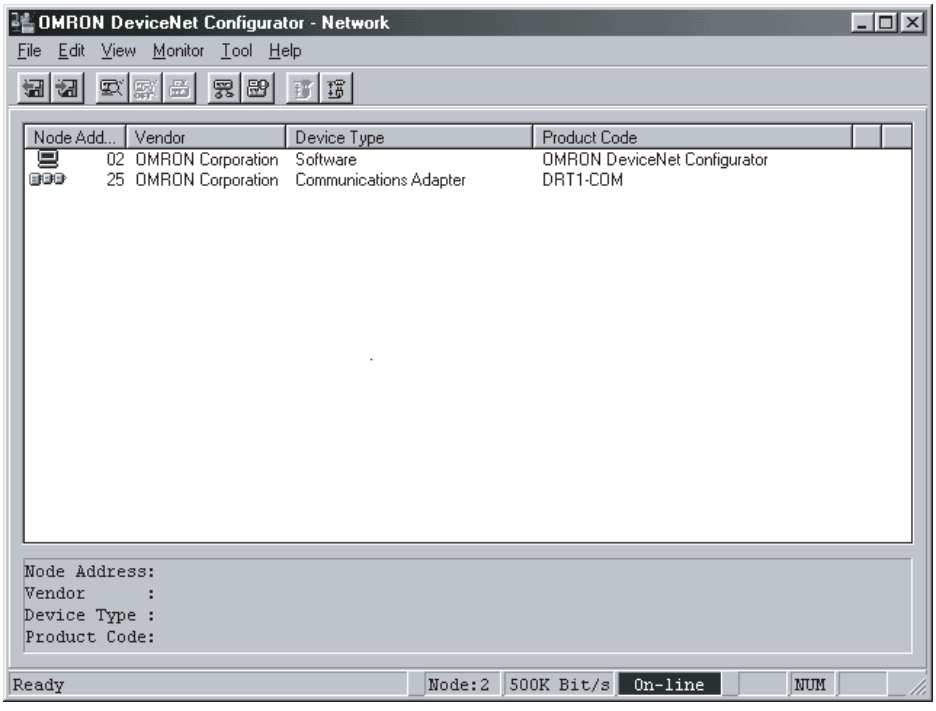


The Edit Device Parameters Window for the selected Communications Unit will be displayed.

5. Click ***Set*** on the right of the Temperature Input Unit to be set. ***Unit 1*** to ***Unit 8*** correspond to I/O Units #0 to #7.

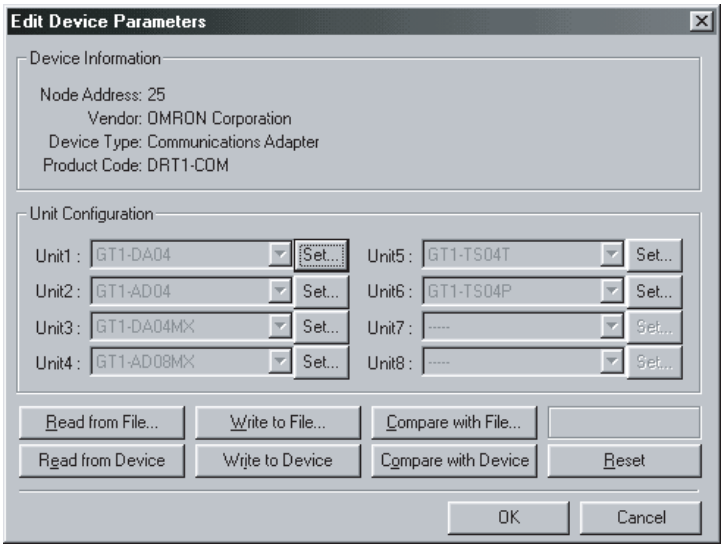


The Edit Unit Parameters Window for the Temperature Input Unit will be displayed.

6. Click ***Calibration***.

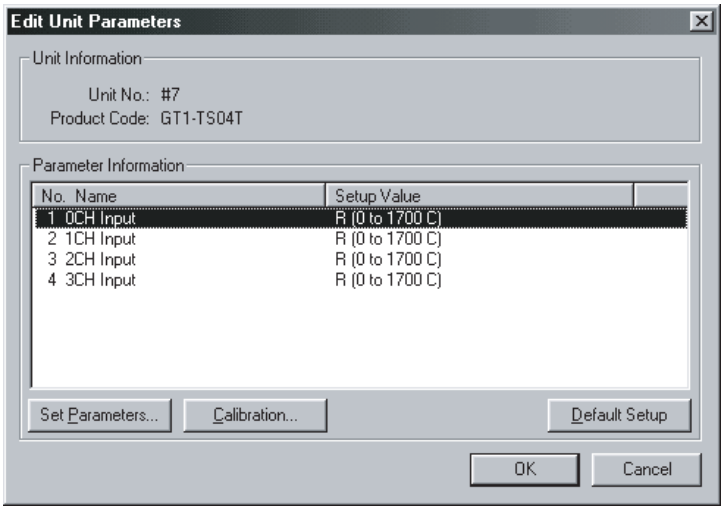


The Calibrate Unit Window will be displayed. At this time, the Temperature Input Unit will enter Calibration Mode. While in Calibration Mode, temperature data sent to the Master will be 7FFF Hex. (7FFFFFFF Hex if in 2-decimal-place Mode). Exit the Calibration Mode by resetting the MULTIPLE I/O TERMINAL, or by turning the power OFF and ON again, to return to normal operating conditions.

7. Click the Down Arrow to select the input words, the input type, and the input range to be checked.

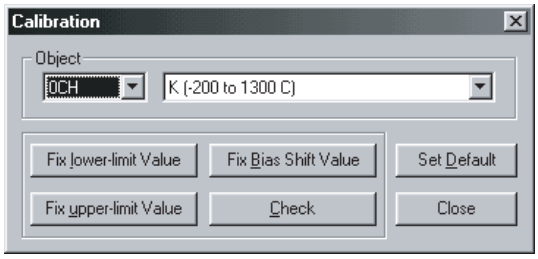


8. Click ***Check***.

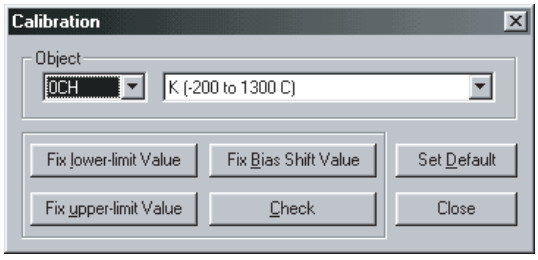


The Check Unit Window will be displayed.

9. Check the lower limit as follows:
   - GT1-TS04T

   Check that the cold contact compensator is operating at 0°C, then apply a voltage equivalent to the lower limit of the conversion range to the input terminal (as selected in step 7) on the Temperature Input Unit from the standard voltage/current generator.
   - GT1-TS04P

   Apply a resistance equivalent to the lower limit of the conversion range to the input terminal (as selected in step 7) on the Temperature Input Unit from the 6-dial precision resistance box.

Check that the temperature data equivalent to the voltage or resistance input is correctly displayed as the Current Value.

10. Repeat step 9 for the median value and the upper limit.
11. To continue checking other inputs, click ***Close*** to return to the Edit Unit Window, and then repeat steps 7 to 10.
12. When you have completed all the checks, click ***Close***.

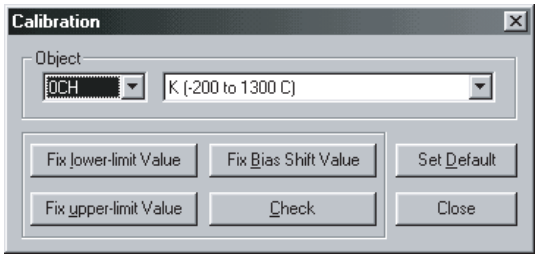


A message asking if you want to reset will appear. Click ***Yes***. The Communications Unit and all I/O Units connected to it will be reset, and the Unit will return to normal operating mode from Calibration Mode. The Edit Unit Parameters Window for the Temperature Input Unit.

**Clearing Calibration**

If the calibrations fail, clear the calibration data stored in the EEPROM in the Temperature Input Unit, and restore the Unit to the default values. All the calibration data stored in the Temperature Input Unit will be cleared simultaneously.

Use the following procedure to clear the data. The DeviceNet and the MULTIPLE I/O TERMINAL must be connected first.

***1,2,3...***

1. Turn ON the power supply to all the Units of the MULTIPLE I/O TERMINAL, including the Communications Unit and the Temperature Input Unit whose calibration data is to be cleared.
2. Connect the Configurator to the DeviceNet network and go online.
3. On the device list for the Configurator, double-click the Communications Unit to which the Temperature Input Unit is connected.

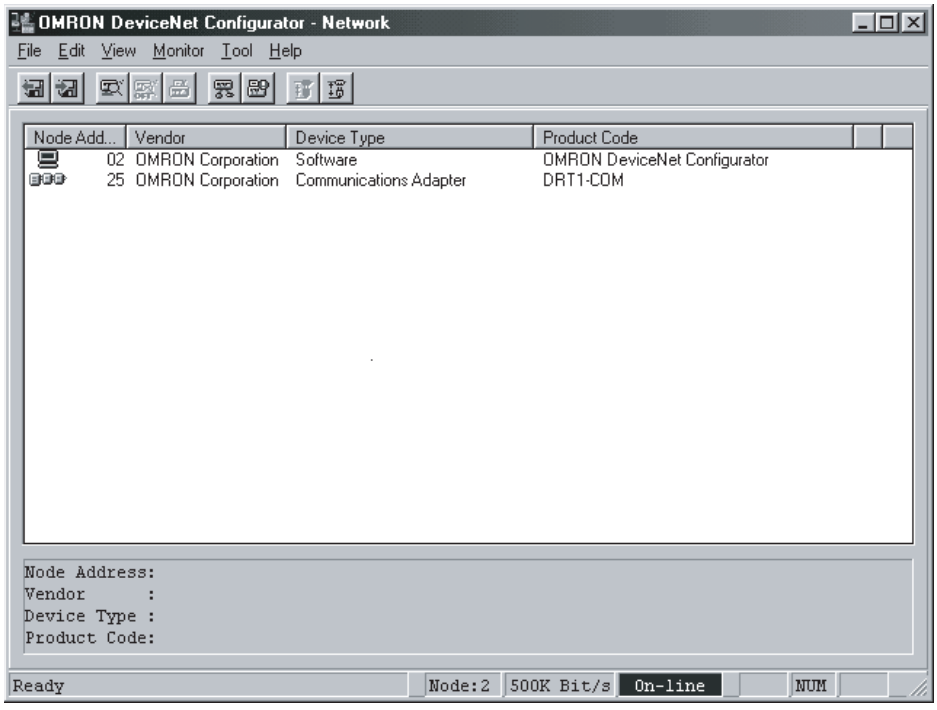


The Edit Device Parameters Window for the selected Communications Unit will be displayed.

4. Click ***Set*** on the right of the Temperature Input Unit to be cleared. ***Unit 1*** to ***Unit 8*** correspond to I/O Units #0 to #7.

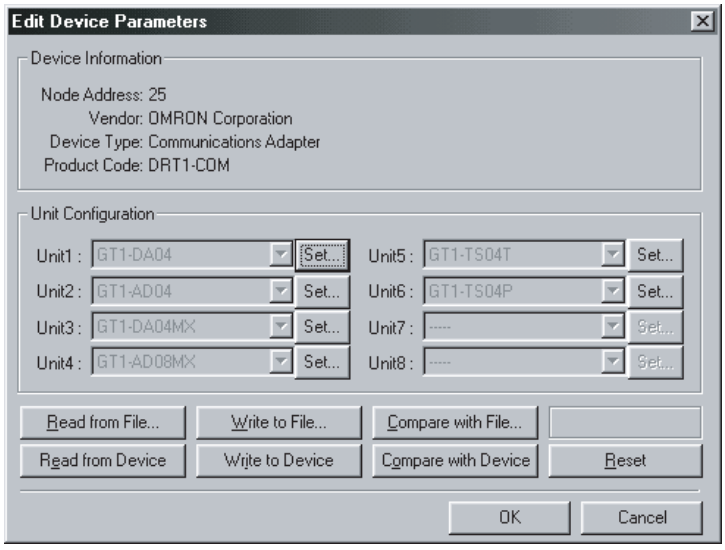


The Edit Unit Parameters Window for the Temperature Input Unit will be displayed.

5. Click ***Calibration***.

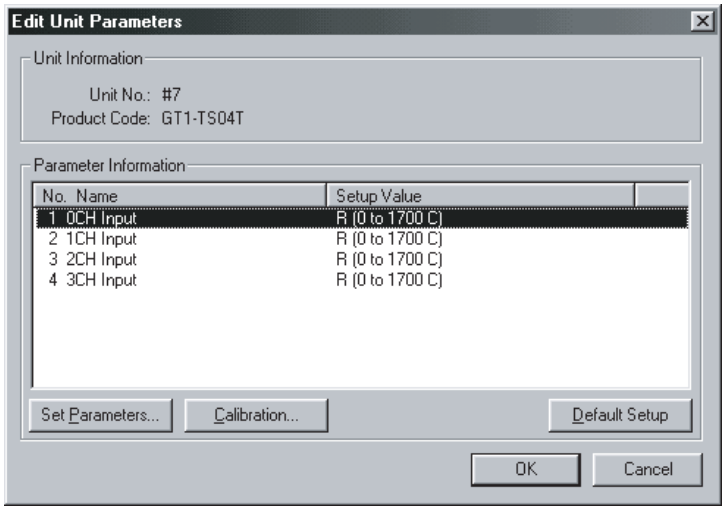


The Calibrate Unit Window will be displayed. At this time, the Temperature Input Unit will enter Calibration Mode. While in Calibration Mode, temperature data sent to the Master will be 7FFF Hex. (7FFFFFFF Hex if in 2-decimal-place Mode). Exit the Calibration Mode by resetting the MULTIPLE I/O TERMINAL, or by turning the power OFF and ON again, to return to normal operating conditions.

6. Click ***Set Default***.

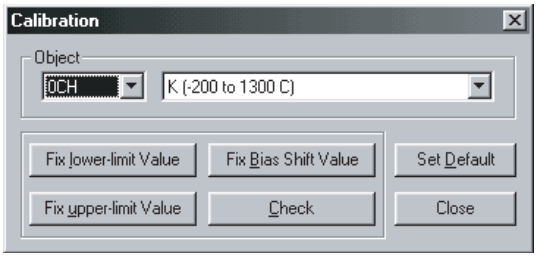

7. A message asking you to confirm will appear. Click ***Yes***.

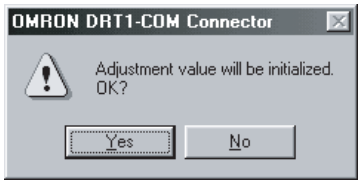


The calibration data stored in the EEPROM in the Temperature Input Unit will be cleared.

8. When you have finished clearing the calibration data, click ***Close***. The Communications Unit and all I/O Units connected to it will be reset, and the Unit will return to normal operating mode from Calibration Mode.

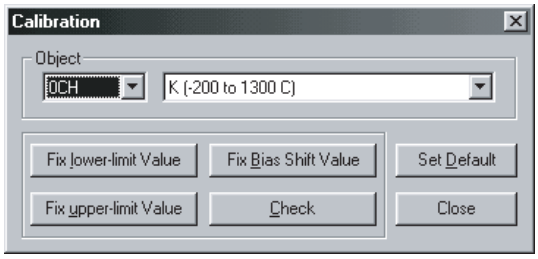


The Edit Unit Parameters Window for the Temperature Input Unit will be displayed.

Note When clearing the calibration data stored in the Temperature Input Unit, the data will be cleared and the default settings enabled at the same time.

# 5-4 GT1-CT01 Counter Unit

**General Specifications**

| Item | | Specification |
|---|---|---|
| I/O connections | | Terminal block (M3) |
| Number of I/O | | Encoder input: 1 point (A, B, Z)<br>External input: 1 point (IN)<br>External output: 2 points (OUT 1, OUT 2)<br>(Allocated 3 input words and 3 output words on the Master) |
| Internal power supply | Voltage range | 20.4 to 26.4 VDC (24 VDC $^{+10\%}/_{-15\%}$) |
| | Current consumption in Unit (inrush current) | Encoder input: 0<br>External input: 0<br>External output: 9 mA max. |
| Current consumption (I/O Unit interface) | | 90 mA max. |
| Noise immunity | | ±2000 V<br>(IEC61000-4-4 via fast transient noise simulator) |
| Vibration resistance | | 10 to 150 Hz, 1.0-mm double amplitude or 70 m/s$^2$ |
| Shock resistance | | 200 m/s$^2$ |
| Dielectric strength | | 500 VAC (between isolated circuits) |
| Ambient temperature | | –10°C to 55°C |
| Ambient humidity | | 25% to 85% (with no condensation) |
| Operating atmosphere | | No corrosive gases |
| Storage temperature | | –25°C to 65°C |
| Safety standards | | UL508, CSA22.2 |
| EMC directives | | EN50081-2, EN50082-2 |
| Mounting | | DIN 35-mm track |
| Weight | | Approx. 250 g |

**Characteristics**

| Item | | Specification |
|---|---|---|
| Number of counters | | 1 |
| Operating modes | | Linear counter |
| Count inputs | Input signals | Encoder input (A, B, Z) |
| | Signal levels | 24 VDC |
| | Types of inputs | Differential phase pulse inputs<br>Pulse and direction inputs |
| | Counting rate | 50 kHz (kcps) |
| | Counting range | –8,388,608 to 8,388,607 (24 bit binary) |
| | Others | The multiple function (× 1, × 4) can be selected for differential phase pulse input |
| External inputs | Input signals | External input (IN) |
| | Signal levels | 24 VDC |
| External outputs | Outputs | External outputs (OUT1, OUT 2) |
| | Switching capacity | 0.5 A/point at 24 VDC |

**Note** When connecting an encoder, use an incremental encoder that has a power supply voltage of 24 VDC and open-collector output. The OMRON Encoders E6B2-CWZ6C and E6H-CWZ6C are recommended.

**Input Specifications (Encoder Input: A, B, Z, External Input: IN)**

| Item | Specification | |
|---|---|---|
| | **Encoder input (A, B, Z)** | **External input (IN)** |
| ON voltage | 19.2 VDC min. (between each input terminal and V) | 15 VDC min. (between each input terminal and V) |
| OFF voltage | 4 VDC max. (between each input terminal and V) | 5 VDC max. (between each input terminal and V) |
| OFF current | 1.0 mA max. | 1.0 mA max. |
| Input current | 18 mA max./point at 24 VDC (between each input terminal and V) | 6 mA max./point at 24 VDC (between each input terminal and V) |
| ON response time | --- | 1.0 ms max. |
| OFF response time | --- | 1.0 ms max. |
| Insulation resistance | 20 MΩ min. at 250 VDC (between isolated circuits) | |
| Isolation method | Photocoupler | |
| Number of circuits | 1 count input point | 1 point |
| Minimum response pulse | Encoder Inputs A and B<br>Waveform<br>Input rising time/falling time:<br>3 ms max. at 50 kHz with pulses with a duty factor of 50%<br> 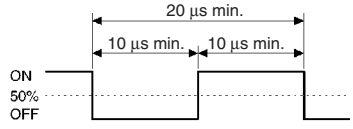 <br><br>Relationship between A and B phases with offset phase input<br> 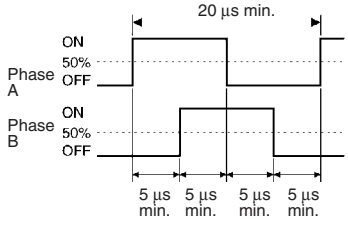 <br><br>Encoder Input Z<br> 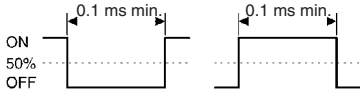 <br> | 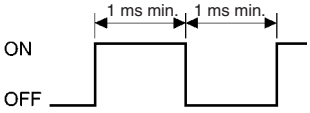 <br> |

**Output Specifications (External Output: OUT1, OUT2)**

| Item | Specification |
|---|---|
| Rated output current | 0.5 A/point |
| Residual voltage | 1.2 V max. at 0.5 A DC (between each output terminal and V and each output terminal and G) |
| Leakage current | 0.1 mA max. at 24 VDC (between each output terminal and V and each output terminal and G) |
| ON response time | 0.5 ms max. |
| OFF response time | 1.5 ms max. |
| Insulation resistance | 20 MΩ min. at 250 VDC (between isolated circuits) |
| Isolation method | Photocoupler |
| Number of circuits | 2 points |

### Components

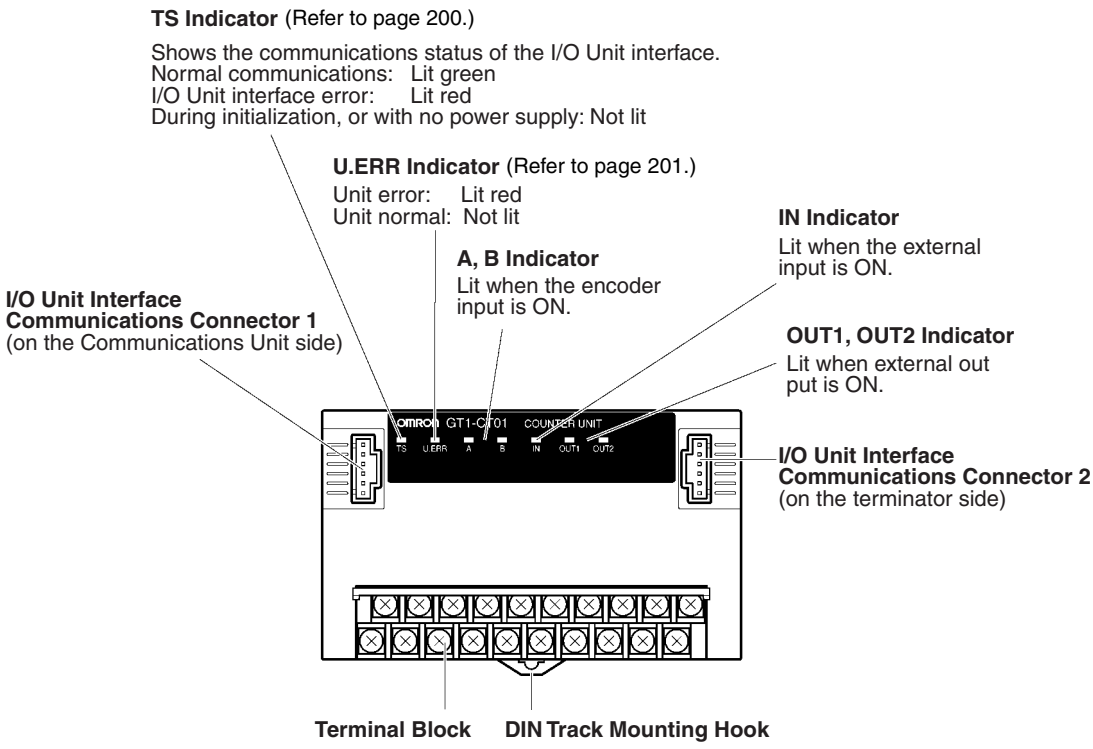


**Note** Setting for the Counter Unit is carried out in a PLC word (output area allocated to the Counter Unit).

### Internal Circuits

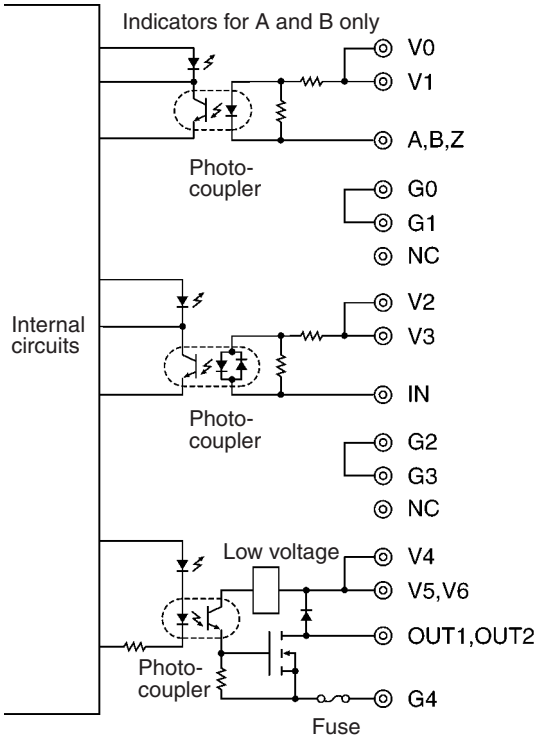


### Terminal Arrangement

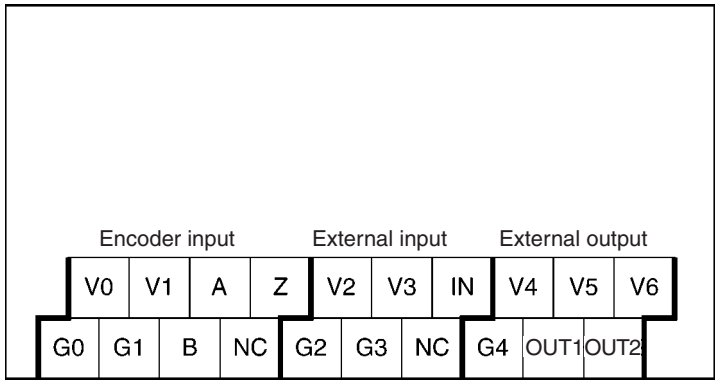

**Wiring**

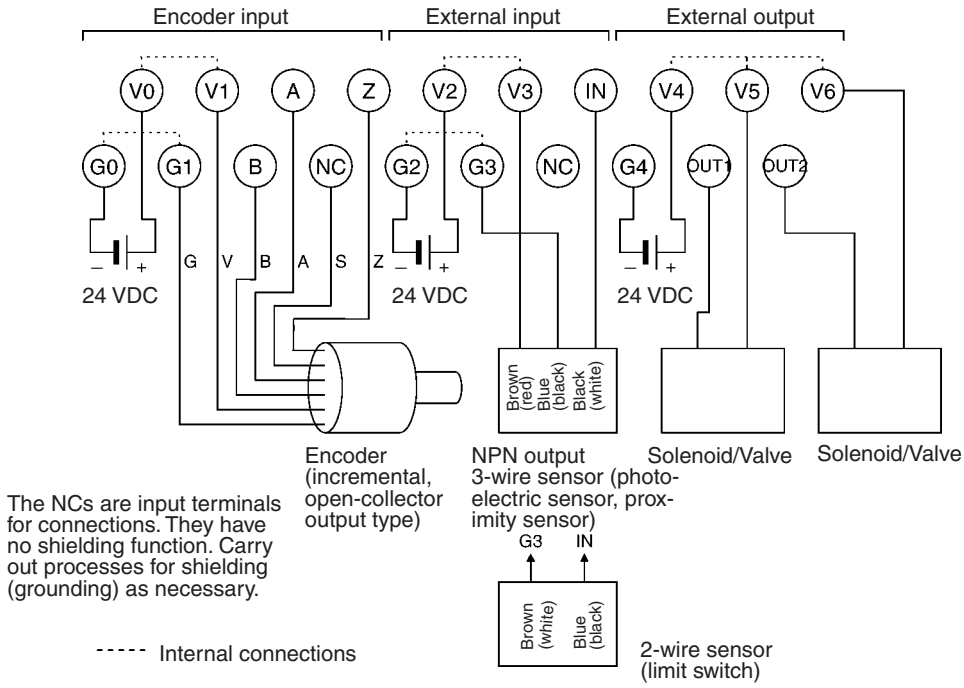


**Note** 1. Do not use the same power supply for the encoder as that used for other I/O Units or communications.

2. Wire colors in parentheses are the previous JIS colors for photoelectric and proximity sensors.

**Count Mode**

The following count modes can be used with the Counter Unit.

**Note** If the count mode is changed during count operations, the present value will be cleared to 0.

**Differential Phase Pulse Inputs**

When the A phase is 90° in advance of the B phase, the input is read as forward rotation and the count is incremented. When the A phase is 90° behind the B phase, the input is read as reverse rotation and the count is decremented. When input is made with differential phase pulse input, the multiple function (×1, ×4) can be used. The following table shows how the multiple function will operate according to the phases of A and B.

| Multiple function | A phase 90° ahead | A phase 90° behind |
|---|---|---|
| ×1 | Count is incremented at rising edge of A-phase input | Count is decremented at falling edge of A-phase input |
| ×4 | Count is incremented at rising edge and falling edge of A-phase input and B-phase input | Count is decremented at rising edge and falling edge of A-phase input and B-phase input |

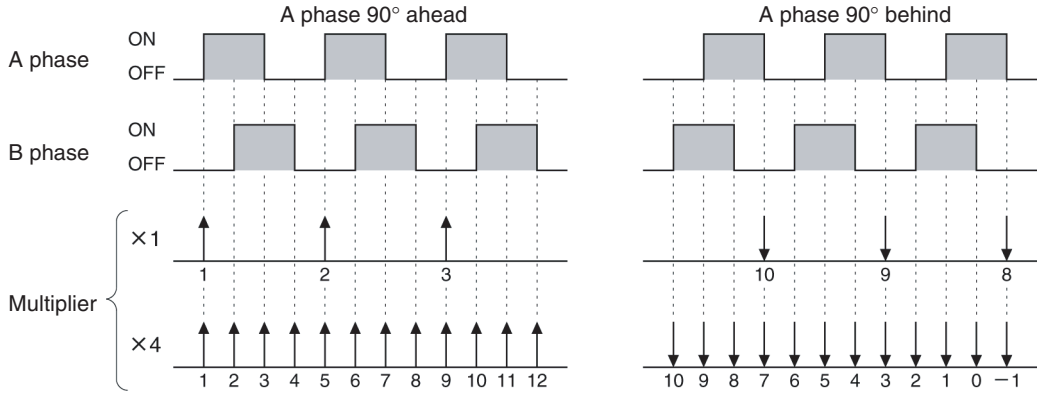


**Note** When using differential phase pulse input at a multiple function setting of ×4, the count number for each revolution of the encoder will be 4 times the resolution of the encoder. Use an encoder that is compatible with the counting range.

**Pulse and Direction Inputs**

Phase A is a pulse signal and phase B is a direction signal. Counting will operate in the following way.

| Phase B OFF | Phase B ON |
|---|---|
| Count is incremented at the rising edge of the A-phase input | Count is decremented at the rising edge of the A-phase input |

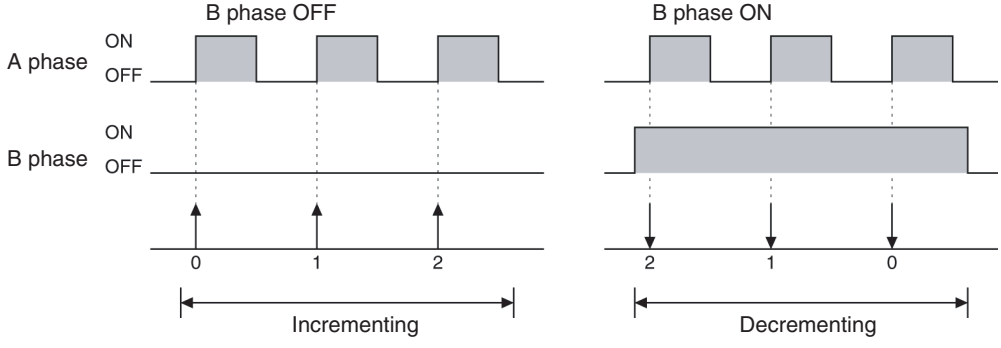


**Note** Switching B phase (direction input) ON and OFF, must be carried out with A phase (pulse input) switched OFF.

**Count Value and External Outputs**

**Counting Range and Underflow/Overflow**

The Counter Unit performs counting in the range –8,388,608 to +8,388,607. If the count value goes outside this range, underflow or overflow will be registered, and counting will stop.

**Note**

1. When counting is stopped because of underflow or overflow, it can be restarted using count value set or reset. For details about count value set or reset, refer to page 179, *Setting and Reading the Count Value and Set Values*.
2. When underflow/overflow occurs, bit 12 in word m+2 of the input area will come ON. For details, refer to page 182, *Word Functions*.
3. The Counter Unit will not perform counting until the count mode has been set. When the Counter Unit is switched ON, however, if the count mode is already set in word n+2 of the output area, counting will start in the specified mode.

**Set Values 1, 2 and External Outputs**

The Counter Unit can set the 2 values, set value 1 and set value 2, and output the comparison result, obtained by comparing these values with the count value, to external outputs 1 and 2. (The comparison result for set value 1 is output to external output 1 and the comparison result for set value 2 is output to external output 2.) Output conditions and external output enable/disable can be set separately for the set values.

Output Conditions:
The following output conditions can be set separately for each of the set values.
Present value ≤ Set value: When the count value is less than or equal to the set value, the external output will be ON.
Present value ≥ Set value: When the count value is greater than of equal to the set value, the external output will be ON.

External Output Enable/Disable:
Actual external output will only be made when the External Output Enable Bits (bits 08 and 09 in word n+2 of the output area) are ON. If the External Output Enable Bits are OFF, external output will remain OFF, even if the output conditions are satisfied.

Bit 08 in word n+2: External Output 1 Enable Bit (ON: enable, OFF: disable)

Bit 09 in word n+2: External Output 2 Enable Bit (ON: enable, OFF: disable)

**Note**

1. Set values 1 and 2, and the output conditions are set in words n, n+1 of the output area. For details about how to make the settings, refer to the following *Setting and Reading the Count Value and Set Values*.

2. The count values and set values can be set in BCD or hexadecimal.

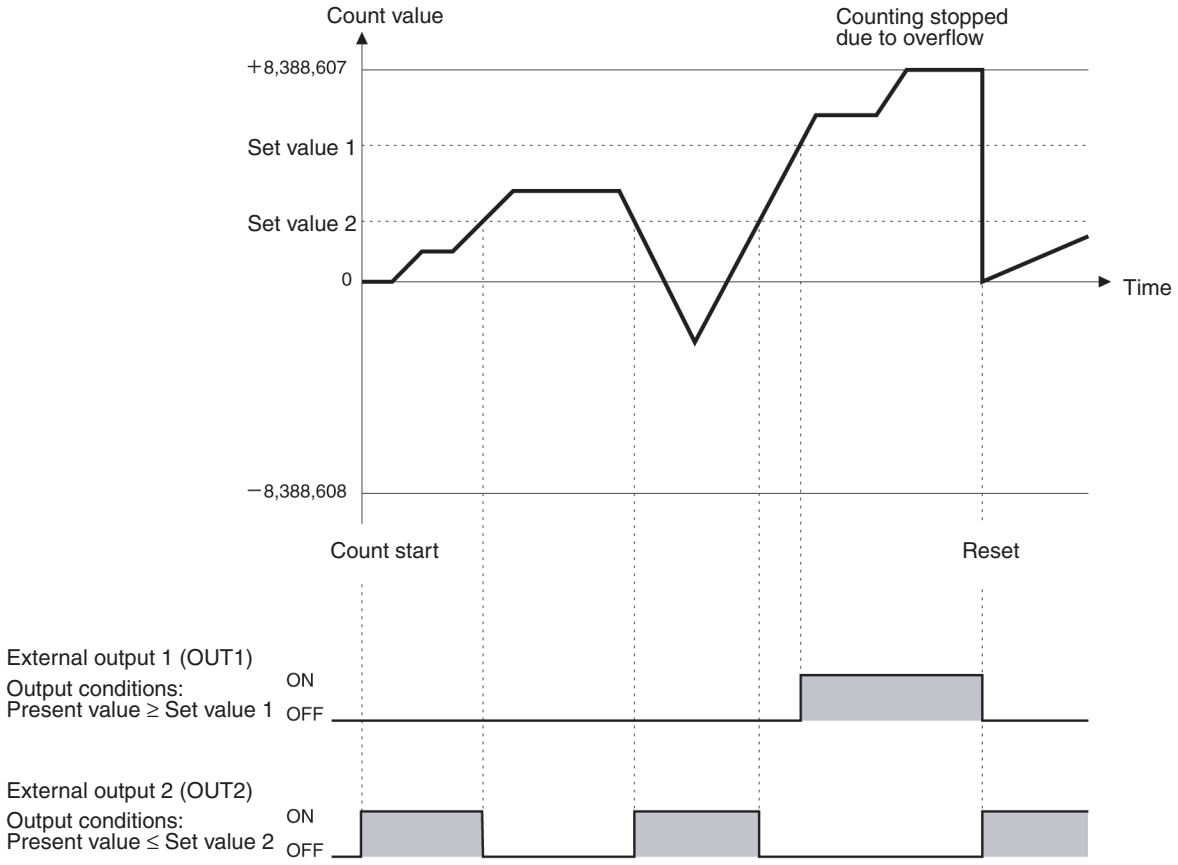


## Setting and Reading the Count Value and Set Values

Count value setting refers to the procedure required to change the present value of the count as required, whereas count value reset refers to the process required to reset the present count value to 0.

### Count Value Reset

The count value can be reset using combinations of the following 3 inputs.

Encoder input Z
External input
The internal Reset Bit (bit 07 in word n+2 of the output area)

The possible combinations (reset modes) are shown in the following table.

| Reset mode | Input | Counter reset condition and timing |
|---|---|---|
| 1 | Encoder input Z | Encoder input Z<br>Reset |
| 2 | External input | External input<br>Reset |
| 3 | Encoder input Z + external input | Encoder input Z<br>External input<br>Reset |
| 4 | Internal Reset Bit | Internal Reset Bit<br>Reset |
| 5 | Encoder input Z + internal Reset Bit | Encoder input Z<br>Internal Reset Bit<br>Reset |
| 6 | External output + internal Reset Bit | External output<br>Internal Reset Bit<br>Reset |
| 7 | Encoder input Z + external input + internal Reset Bit | Encoder input Z<br>External input<br>Internal Reset Bit<br>Reset |

**Note**

1. Setting of the reset mode is performed in bits 12 to 14 in word n+2 of the output area.
2. The Counter Unit will execute reset with the first count following the fulfillment of the reset conditions.
3. Encoder input Z is only effective for the rising edge. When using the encoder input Z under AND conditions with other inputs, ensure that encoder input Z will turn ON last.
4. When repeating reset for the count value, allow an interval of at least 0.1 ms before switching ON the encoder input Z and at least 1 ms before switching ON the external inputs.
5. It is not possible to execute ON/OFF timing for the internal Reset Bit with perfect accuracy, due to the communications time required for remote I/O communications.

**Count Value Setting**

The count value (the present value) for the Counter Unit can be set as required, to any value in range –8,388,608 to +8,388,607. Count value setting can be performed in BCD or hexadecimal.

**Note**

1. Count value setting is performed by setting a value in words n, n+1 of the output area as shown below, and switching ON the Count Value Setting Bit (word n+2, bit 02).

2. Specify whether the setting will be made in BCD or in hexadecimal in the Data Code Switching Bit (word n+2, bit 03).
3. Count value setting can be performed regardless of whether or not count operation is being carried out. Due to the communications time required for remote I/O communications, however, timing for setting cannot be performed with perfect accuracy during count operation.

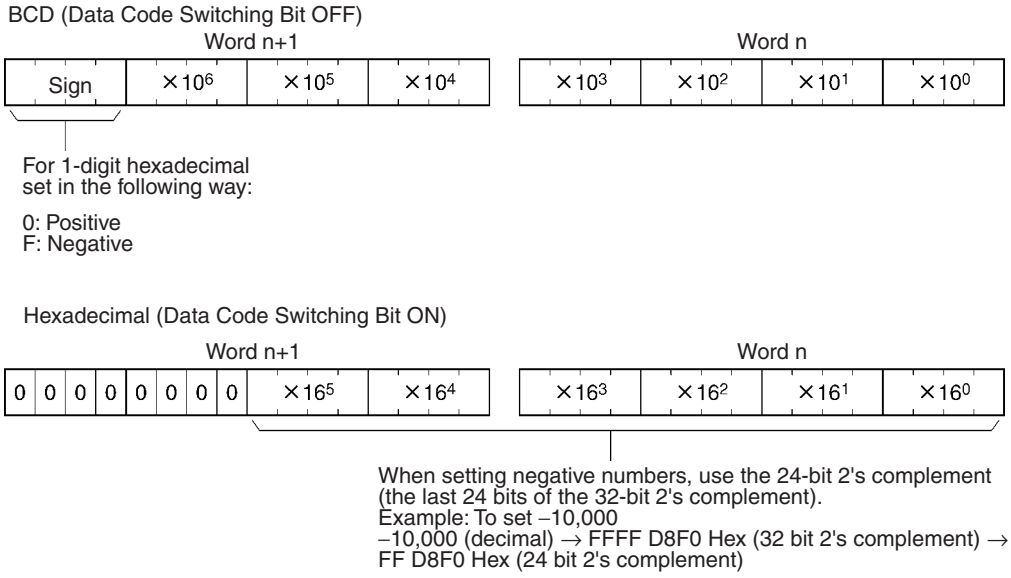


**Reading the Count Value**

By switching ON the Count Value Reading Bit (word n+2, bit 06), the count value can be read and stored in words m, m+1 of the input area. The format of the stored value will be the same as that at setting.

**Note**
1. The value will be stored in either BCD or hexadecimal, according to the setting of the Data Code Switching Bit (word n+2, bit 03).
2. Reading of the count value can be performed regardless of whether or not count operation is being carried out. Due to the communications time required for remote I/O communications, however, timing for reading cannot be performed with perfect accuracy during count operation.

**Setting of Set Values 1 and 2**

Set values 1 and 2 can be set separately, to values in range –8,388,608 to +8,388,607. When this is performed, the output conditions will also be set. Setting of the set values can be performed in either BCD or hexadecimal.

**Note**
1. To make the set value settings, set the values in words n and n+1 of the output area, as shown below, and switch the Set Value 1 Setting Bit (word n+2, bit 00) or the Set Value 2 Setting Bit (word n+2, bit 01) ON.
2. Specify whether the setting will be made in BCD or in hexadecimal in the Data Code Switching Bit (word n+2, bit 03).

3. Setting of the set values can be performed regardless of whether or not count operation is being carried out. Due to the communications time required for remote I/O communications, however, timing for setting cannot be made with perfect accuracy during count operation.

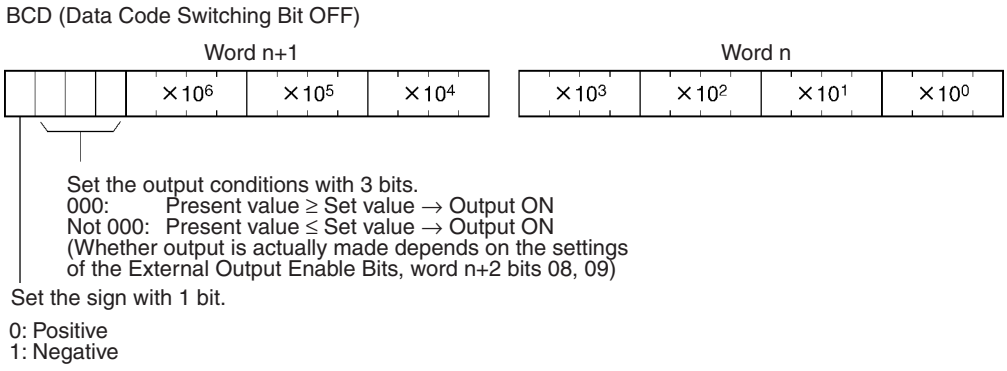


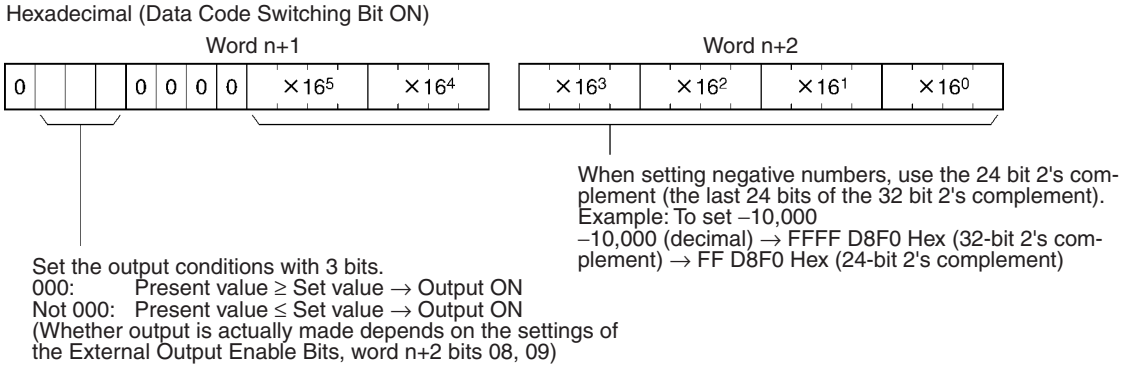


**Reading Set Values 1 and 2**

By switching ON the Set Value 1 Reading Bit (word n+2, bit 04) or the Set Value 2 Reading Bit (word n+2, bit 05), the set values can be read and stored in words m, m+1 of the input area. When this is performed, the set output conditions will also be read. The format of the stored value will be the same as that at setting.

**Note** The values will be stored in either BCD or hexadecimal, according to the setting of the Data Code Switching Bit (word n+2, bit 03).

## Word Functions

The Counter Unit is allocated output word 3 and input word 3 in the allocated area of the Master. Readings of the settings and status of the Counter Unit are made from the Master via this area.

This section describes the functions of the words that the Counter Unit uses.

In the following explanation, word n refers to the first word in the output area, and m word refers to the first word in the input area.

**Note**

1. For details about allocation in the allocation area in the Master, refer to the *DeviceNet Operation Manual (W267)*.
2. If the power supply from the I/O unit interface to the Counter Unit stops, the Counter Unit will stop count operations. If this happens, it will be necessary to start up the Counter Unit again. Furthermore, when this is carried out, the present value, the set values, and the count modes will all be cleared and so these settings will also have to be made again.

## Output Word Functions

| Word | Bit | Function |
|---|---|---|
| Wd n | 00 to 15 | |
| Wd n+1 | 00 to 15 | |

**Setting Count Value**

At the rising edge of the Count Value Setting Bit (word n+2, bit 2) starts, the value is read and set.

BCD (Data Code Switching Bit OFF)

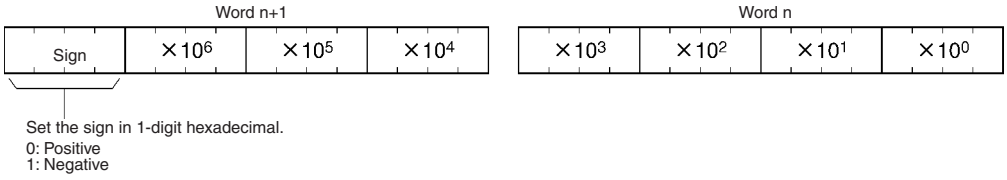


Hexadecimal (Data Code Switching Bit ON)

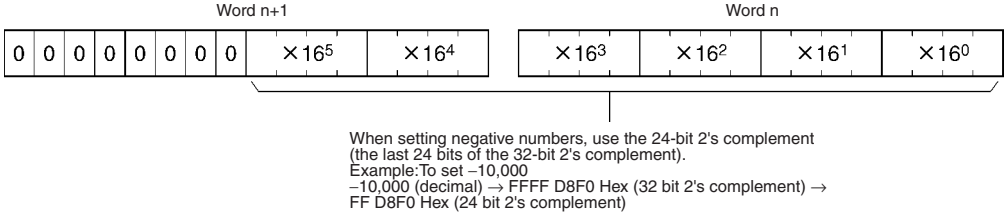


**Setting Set Values**

At the rising edge of the Set Value 1 Setting Bit (word n+2, bit 0) or the Set Value 2 Setting Bit (word n+2, bit 1) starts, the value is read and set.

BCD (Data Code Switching Bit OFF)

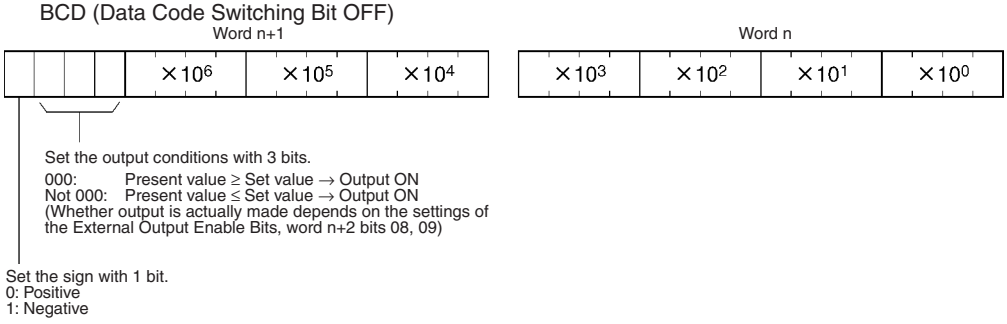


Hexadecimal (Data Code Switching Bit ON)

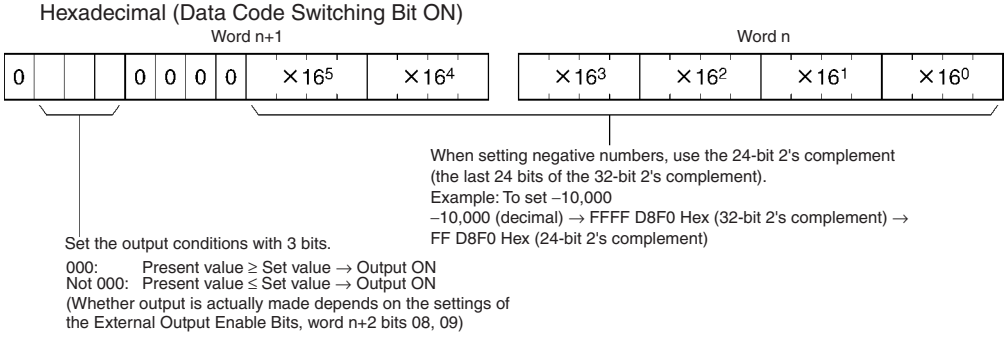


**Setting Range**

| Value (decimal) | BCD (sign + 7 digits) | Hexadecimal (6 digits) |
|---|---|---|
| –8,388,608 | F838 8608 | 80 0000 |
| to | to | to |
| –1 | F000 0001 | FF FFFF |
| 0 | 0000 0000 | 00 0000 |
| 1 | 0000 0001 | 00 0001 |
| to | to | to |
| 8,388,607 | 0838 8607 | 7F FFFF |

| Word | Bit | Name | Function |
|---|---|---|---|
| Wd n+2 | 00 | Set Value 1 Setting Bit | At the rising edge of this bit, the Counter Unit reads the value from words n and n+1, and sets it as set value 1. Before turning this bit OFF, check that bit 00 in word m+2 (Set Value 1 Setting Completion Flag) is ON. |
| | 01 | Set Value 2 Setting Bit | At the rising edge of this bit, the Counter Unit reads the value from words n and n+1, and sets it as set value 2. Before turning this bit OFF, check that bit 01 in word m+2 (Set Value 2 Setting Completion Flag) is ON. |
| | 02 | Count Value Setting Bit | At the rising edge of this bit, the Counter Unit reads the value from words n and n+1, and changes the count value (present value). Before turning this bit OFF, check that bit 02 in word m+2 (Count Value Setting Completion Flag) is ON. |
| | 03 | Data Code Switching Bit | This bit determines whether the setting and reading of the count value or the set values is performed in BCD or hexadecimal.<br>OFF: BCD<br>ON: Hexadecimal |
| | 04 | Set Value 1 Reading Bit | While this bit is ON, the Counter Unit reads the normal value of set value 1 and the output conditions and stores them in words m and m+1. |
| | 05 | Set Value 2 Reading Bit | While this bit is ON, the Counter Unit reads the normal value of set value 2 and the output conditions and stores them in words m and m+1. |
| | 06 | Count Value Reading Bit | While this bit is ON, the Counter Unit reads the normal value of the count value and stores it in words m and m+1. |
| | 07 | Internal Resetting Bit | When used for count value resetting, the rising edge of this bit becomes the condition for resetting (only enabled for rising edge). |
| | 08 | External Output 1 Enable Bit | This bit determines whether external output 1 comes ON when the output conditions for the count value and set value 1 are fulfilled.<br>OFF: No output (regardless of comparison result, external output 1 will always be OFF)<br>ON: Output (when the output conditions are fulfilled, external output 1 will turn ON) |
| | 09 | External Output 2 Enable Bit | This bit determines whether external output 2 comes ON when the output conditions for the count value and set value 2 are fulfilled.<br>OFF: No output (regardless of comparison result, external output 2 will always be OFF)<br>ON: Output (when the output conditions are fulfilled, external output 2 will turn ON) |
| | 10<br>11 | Count Mode Selection Bits | The count mode is set in the following way.<br>Bit 11 Bit 10 Count mode<br>OFF OFF No mode change<br>OFF ON Pulse and direction input mode<br>ON OFF Differential phase pulse input (×4)<br>ON ON Differential phase pulse input (×1)<br>Between the Counter Unit startup and count mode setting, count operations will not begin. If the count mode has already been set when the Counter Unit is started up, however, count operations will start in the count mode set. If the count mode is changed during count operations, the present value will be cleared to 0 before counting starts in the new mode. |
| | 12<br>13<br>14 | Reset Mode Setting Bits | The reset mode is set in the following way.<br>Bit 14 Bit 13 Bit 12 Reset mode<br>OFF OFF OFF No mode change<br>OFF OFF ON Encoder input Z<br>OFF ON OFF External input<br>OFF ON ON Encoder input Z and external input<br>ON OFF OFF Internal reset bit<br>ON OFF ON Encoder input Z and internal reset bit<br>ON ON OFF External input and internal reset bit<br>ON ON ON Encoder input Z, external input, and internal reset bit |
| | 15 | I/O Unit Interface Error Setting Bit | Counter Unit operations in the event of I/O Unit interface error (see note) are set in the following way.<br>OFF: Count operations will be stopped, and the present value and set values 1 and 2 will be cleared to 0. External outputs 1 and 2 will be turned OFF.<br>ON: Count operations will continue.<br>**Note:** In the event of I/O Unit interface error, the Communications Unit and all the I/O Units must be restarted. |

**Note** A priority exists for setting and reading commands. If a bit with a higher priority always comes first, other settings and readings will not be made, even if they have been specified. In order of decreasing priority:
1. Count value setting → 2. Set value 2 setting → 3. Set value 1 setting → 4. Count value reading → 5. Set value 2 reading → 6. Set value 1 reading

### Input Word Functions

| Word | Bit | Function |
|---|---|---|
| Wd m | 00 to 15 | **Reading Count Value**<br>While the Count Value Reading Bit (word n+2, bit 06) is ON, the value will be constantly read and stored<br>BCD (Data Code Switching Bit OFF)<br>Word n+1: Sign, $\times 10^6$, $\times 10^5$, $\times 10^4$<br>Word n: $\times 10^3$, $\times 10^2$, $\times 10^1$, $\times 10^0$<br>The sign will be stored in 1-digit hexadecimal.<br>0: Positive<br>1: Negative<br>Hexadecimal (Data Code Switching Bit ON)<br>Word n+1: 0 0 0 0 0 0 0 0, $\times 16^5$, $\times 16^4$<br>Word n: $\times 16^3$, $\times 16^2$, $\times 16^1$, $\times 16^0$<br>Negative numbers will be stored using the 24-bit 2's complement (the last 24 bits of the 32-bit 2's complement).<br>Example:For –10,000<br>–10,000 (decimal) → FFFF D8F0 Hex (32-bit 2's complement) → FF D8F0 Hex (24-bit 2's complement)<br>**Reading Set Values**<br>While the Set Value 1 Reading Bit (word n+2, bit 04) or the Set Value 2 Reading Bit (word n+2, bit 05) is ON, the values and the output conditions will constantly be read and stored.<br>BCD (Data Code Switching Bit OFF)<br>Word n+1: $\times 10^6$, $\times 10^5$, $\times 10^4$<br>Word n: $\times 10^3$, $\times 10^2$, $\times 10^1$, $\times 10^0$<br>The output conditions will be stored with 3 bits.<br>000: Present value ≥ Set value → Output ON<br>Not 000: Present value ≤ Set value → Output ON<br>(Whether output is actually made depends on the settings of the External Output Enable Bits, word n+2 bits 08, 09)<br>The sign will be stored with 1 bit.<br>0: Positive<br>1: Negative |
| Wd m+1 | 00 to 15 | Hexadecimal (Data Code Switching Bit ON)<br>Word n+1: 0, 0 0 0 0, $\times 16^5$, $\times 16^4$<br>Word n: $\times 16^3$, $\times 16^2$, $\times 16^1$, $\times 16^0$<br>Negative numbers will be stored using the 24-bit 2's complement (the last 24 bits of the 32-bit 2's complement).<br>Example:For –10,000<br>–10,000 (decimal) → FFFF D8F0 Hex (32-bit 2's complement) → FF D8F0 Hex (24-bit 2's complement)<br>The output conditions will be stored with 3 bits.<br>000: Present value ≥ Set value → Output ON<br>Not 000: Present value ≤ Set value → Output ON<br>(Whether output is actually made depends on the settings of the External Output Enable Bits, word n+2 bits 08, 09)<br>**Setting Range** |

| Value (decimal) | BCD (sign + 7 digits) | Hexadecimal (6 digits) |
|---|---|---|
| –8,388,608 | F838 8608 | 80 0000 |
| to | to | to |
| –1 | F000 0001 | FF FFFF |
| 0 | 0000 0000 | 00 0000 |
| 1 | 0000 0001 | 00 0001 |
| to | to | to |
| 8,388,607 | 0838 8607 | 7F FFFF |

| Word | Bit | Name | Function |
|---|---|---|---|
| Wd m+2 | 00 | Set Value 1 Setting Completion Flag | When setting for set value 1 has been completed, even if an error has occurred, this flag will turn ON. This flag will turn OFF if bit 00 in word n+2 (Set Value 1 Setting Bit) turns OFF, or if a command is executed for a bit with a higher priority.<br>Use bit 13 in word m+2, to check whether the setting was completed under normal or error status. |
| | 01 | Set Value 2 Setting Completion Flag | When setting for set value 2 has been completed, even if an error has occurred, this flag will turn ON. This flag will turn OFF if bit 01 in word n+2 (Set Value 2 Setting Bit) turns OFF, or if a command is executed for a bit with a higher priority.<br>Use bit 13 in word m+2, to check whether the setting was completed under normal or error status. |
| | 02 | Count Value Setting Completion Flag | When setting for the count value has been completed, even if an error has occurred, this flag will turn ON. This flag will turn OFF if bit 02 in word n+2 (Count Value Setting Bit) turns OFF.<br>Use bit 13 in word m+2, to check whether the setting was completed under normal or error status. |
| | 03 | Data Code Status Flag | This flag shows whether the data stored in words m and m+1 is displayed in BCD or hexadecimal.<br>OFF: BCD<br>ON: Hexadecimal |
| | 04 | Set Value 1 Stored Flag | This flag will turn ON if the data stored in words m and m+1 is set value 1. This flag will turn OFF if bit 04 in word n+2 (Set Value 1 Reading Bit) turns OFF, or if a command is executed for a bit with a higher priority. |
| | 05 | Set Value 2 Stored Flag | This flag will turn ON if the data stored in words m and m+1 is set value 2. This flag will turn OFF if bit 05 in word n+2 (Set Value 2 Reading Bit) turns OFF, or if a command is executed for a bit with a higher priority. |
| | 06 | Count Value Stored Flag | This flag will turn ON if the data stored in words m and m+1 is the count value. This flag will turn OFF if bit 06 in word n+2 (Count Value Reading Bit) turns OFF, or if a command is executed for a bit with a higher priority. |
| | 07 | Count Operating Flag | This flag shows the status of count operation.<br>OFF: Stopped<br>ON: In operation |
| | 08 | External Output 1 Status Flag | This flag shows the status of external output 1.<br>OFF: Low (OFF)<br>ON: High (ON)<br>This flag will always be OFF, when the External Output 1 Enable Bit (word n+2, bit 08) is OFF. |
| | 09 | External Output 2 Status Flag | This flag shows the status of external output 2.<br>OFF: Low (OFF)<br>ON: High (ON)<br>This flag will always be OFF, when the External Output 2 Enable Bit (word n+2, bit 09) is OFF. |
| | 10 | Encoder Input Z Status Flag | This flag shows the status of encoder input Z.<br>OFF: Low (OFF)<br>ON: High (ON) |
| | 11 | External Input Status Flag | This flag shows the status of external input.<br>OFF: Low (OFF)<br>ON: High (ON) |
| | 12 | Underflow/ Overflow Flag | This flag will turn ON if the count value registers underflow or overflow. Count operation will stop with the count value at either the lower or upper limit.<br>To restart count operation, execute counter value setting or resetting. This flag will turn OFF when counting restarts. |
| | 13 | Setting Error Flag | This flag will turn ON if setting for the count value or set values is completed under error status. This may occur if a value is outside the specified range, or there is an irregularity in the value format.<br>This flag will turn OFF when the set values or the count value are set correctly. |
| | 14 | Reserved for system | (Do not set) |
| | 15 | | |

**Procedure Example**

This section provides a procedure example starting from the settings of the Counter Unit up to the outputting of comparison results.

This example only provides the basic procedure. For details about actual setting and programming, refer to page 182, *Word Functions* or *3-1 Examples of Counter Unit Operation*.

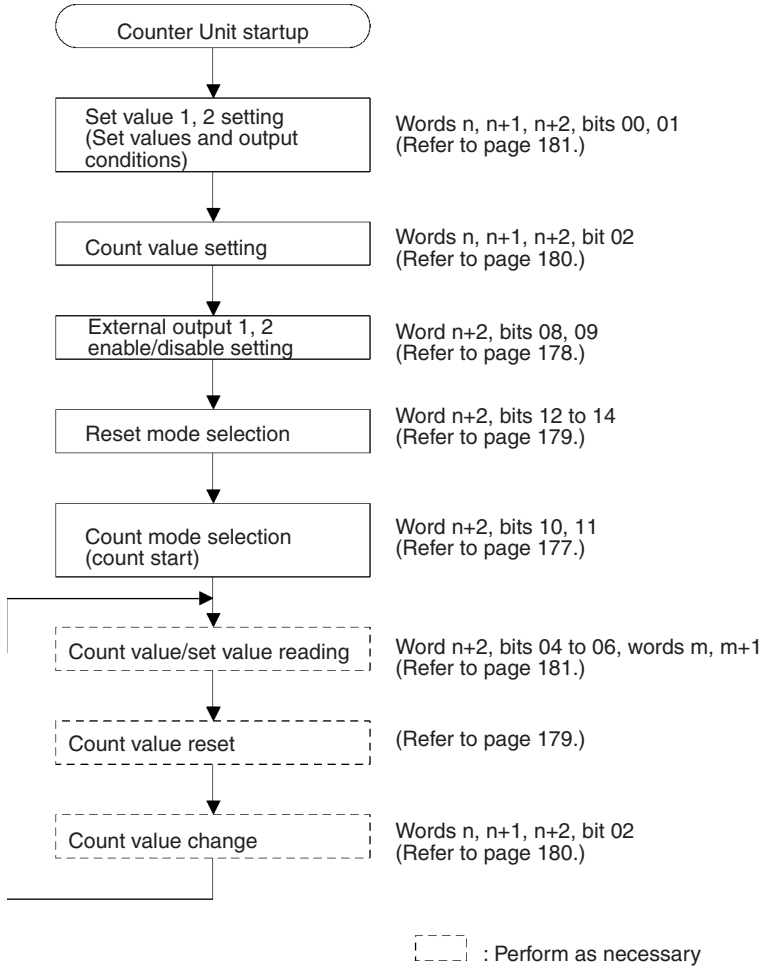


**Dimensions**

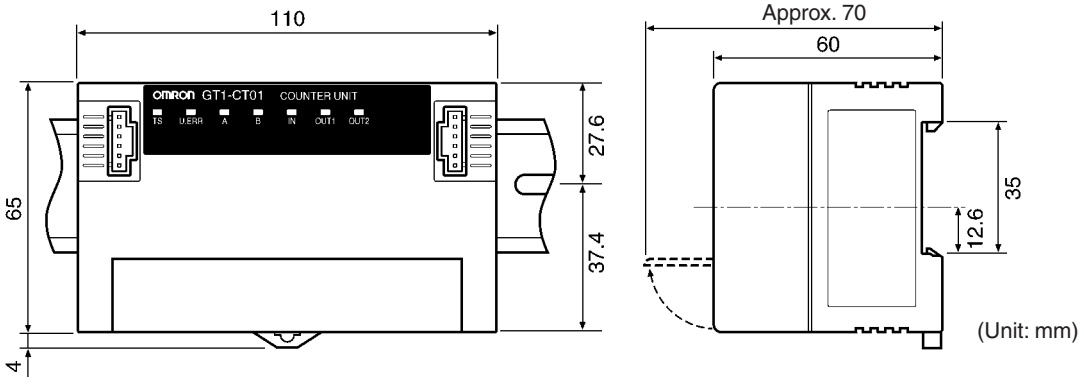


**Note** The vertical center of the Unit is 4.9 mm lower than the center of the DIN track. The Unit therefore extends downward 41.4 mm (including the mounting hook) from the DIN track center.

# SECTION 6
# Communications Timing

This section provides characteristics for communications in the DeviceNet Unit and describes how to calculate the times required for communications between Units.


6-1 Remote I/O Communications Characteristics . . . . . 190
6-1-1 I/O Response Time. . . . . 190
6-1-2 Communications Cycle Time and Refresh Time . . . . . 191
6-1-3 I/O Unit Interface Cycle Time . . . . . 193

# 6-1 Remote I/O Communications Characteristics

This section describes the characteristics of DeviceNet communications when OMRON Master and Slave Units are being used. Use this section for reference when planning operations that require precise I/O timing.

The equations provided here are valid under the following conditions:

***1,2,3...***

1. The Master Unit is operating with the scan list enabled.
2. All of the required Slaves are participating in communications.
3. No errors are being indicated at the Master Unit
4. Messages are not being produced in the Network (from another company's configurator, for example).

**Note**

1. The values provided by these equations may not be accurate if another company's Master or Slave is being used in the Network.
2. This manual only refers to parts related to the MULTIPLE I/O TERMINAL. For details about the Master Unit or the entire DeviceNet, refer to the *DeviceNet Operation Manual (W267)*, and for details about Slaves other than the MULTIPLE I/O TERMINAL, refer to the *DeviceNet Slaves Operation Manual (W347)*.

## 6-1-1 I/O Response Time

The I/O response time is the time it takes from the reception of an input signal at an Input Slave (MULTIPLE I/O TERMINAL Input I/O Unit) to the output of the corresponding output signal at an Output Slave (MULTIPLE I/O TERMINAL Output I/O Unit).

**Minimum I/O Response Time**

The minimum I/O response times are the I/O response times shown in the following diagram.

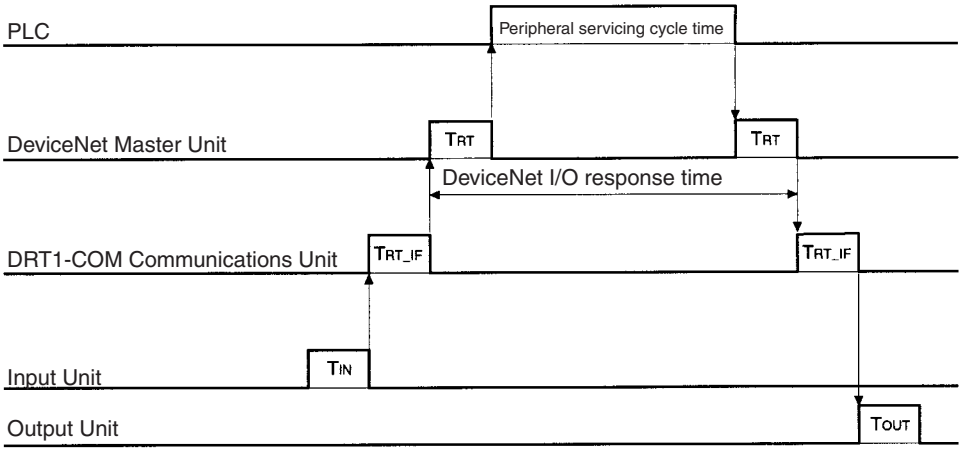


$T_{IN}$: Input I/O Unit ON (OFF) delay time
$T_{OUT}$: Output I/O Unit ON (OFF) delay time
$T_{RT\text{-}IF}$: I/O Unit interface communications time (1.5 ms)
$T_{RT}$: Communications time for 1 Slave (refer to page 192)

The minimum I/O response time ($T_{MIN}$) is the total of the following terms:

$$T_{MIN} = T_{IN} + T_{RT\text{-}IF} + (\text{DeviceNet I/O response time}) + T_{RT\text{-}IF} + T_{OUT}$$

**Note** For details on the Input I/O Unit input delay time and the Output I/O Unit output delay time, see information on the I/O Units in *1-1 MULTIPLE I/O TERMINAL*; for details on the DeviceNet I/O response times, see the explanation of the remote I/O communications performance.

**Note** Refer to the PLC's Operation Manual for details on the PLC's cycle time.

**Maximum I/O Response Time**

The maximum I/O response time occurs with the I/O timing shown in the following diagram.

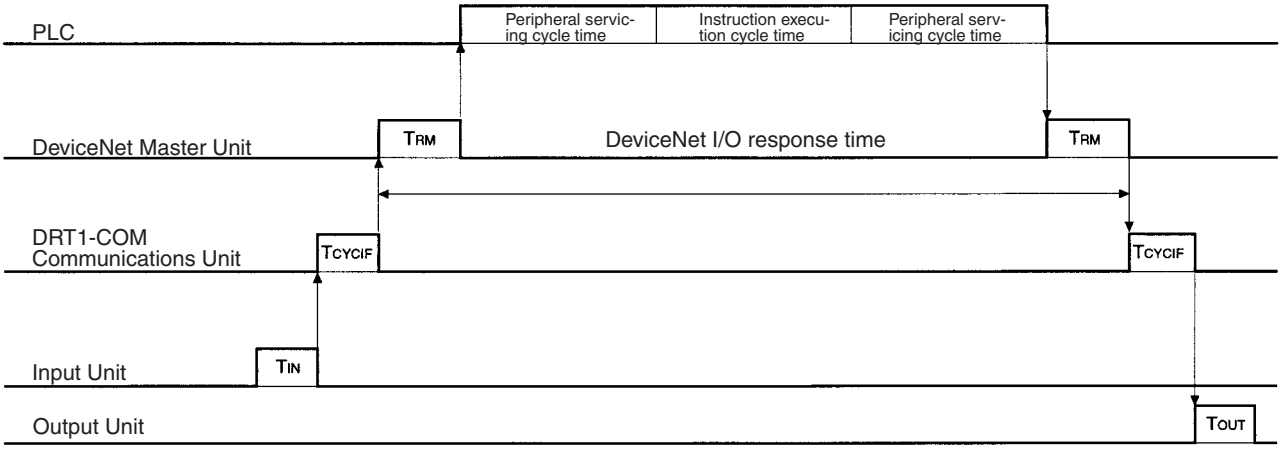


$T_{IN}$: Input I/O Unit ON (OFF) delay time

$T_{OUT}$: Output I/O Unit ON (OFF) delay time

$T_{CYCIF}$: I/O Unit interface cycle time (see *6-1-3 I/O Unit Interface Cycle Time*)

$T_{RM}$: Communications cycle time for the whole network

The maximum I/O response time ($T_{MAX}$) is the total of the following terms:

$$T_{MAX} = T_{IN} + T_{CYCIF} \times 2 + (\text{DeviceNet I/O response time}) + T_{OUT}$$

**Note** For details on the Input I/O Unit input delay time and the Output I/O Unit output delay time, refer to information on the I/O Units in *1-1 MULTIPLE I/O TERMINAL*; for details on the I/O Unit interface cycle time, refer to *6-1-3 I/O Unit Interface Cycle Time*; for details on the DeviceNet I/O response times, see the explanation of the remote I/O communications performance.

**Note** Refer to the PLC's Operation Manual for details on the PLC's cycle time.

## 6-1-2 Communications Cycle Time and Refresh Time

This section explains the communications cycle time, communications time/Slave, and refresh time.

**Communications Cycle Time**

The communications cycle time is the time from the completion of a Slave's remote I/O communications processing until remote I/O communications with the same Slave are processed again. The communications cycle time is used to calculate the maximum I/O response time.

The communications cycle time depends on the number of Masters on the Network and on whether or not message communications are being performed. The explanation given here applies to use with 1 Master. For use with several Masters, refer to the explanation on remote I/O communications characteristics in *DeviceNet Operation Manual (W267)*.

The following equations show the communications cycle time ($T_{RM}$) when there is only 1 Master in the Network.

$T_{RM} = \Sigma$ (communications time per Slave: $T_{RT}$)
+multiple Units processing time
+Explicit message processing time
$+0.01 \times N + 1.0$ (ms)

- For details about the communications time required for 1 Slave refer to page 192. For the MULTIPLE I/O TERMINAL, it equals the communications time required for 1 Slave Unit of the Communications Unit. Σ (communications time per Slave) is the total of the communications times for all the Slaves in the network.
- Multiple Units processing time = 3.5 (ms). It is to be added only if there is a Slave where the input or output exceeds 8 bytes.
- Explicit message processing time = $0.11 \times T_B + 0.6$ (ms). It is to be added only when explicit message communications are executed. $T_B$ is a fixed value (At 500 kbps = 2, 125 kbps = 4, 125 kbps = 8).
- N = Number of Slaves

**Communications Time per Slave**

The communications time per Slave is the communications time required for a single Slave. The formula for calculating the communications time per Slave ($T_{RT}$) for different types of Slave is shown below. For the MULTIPLE I/O TERMINAL, it will be the communications time per Slave of the Communications Unit. With the MULTIPLE I/O TERMINAL, 2 input words (4 bytes) are used for notifying the status of I/O Unit interfaces. This must be included as the number of bytes when making calculations.

**Output Slave with 8 Bytes of Output or Less**

$T_{RT} = 0.016 \times T_B \times S_{OUT1} + 0.11 \times T_B + 0.07$ (ms)

$S_{OUT1}$: Number of output words for the Output Slave
$T_B$: At 500 kbps = 2, 250 kbps = 4, 125 kbps = 8

**Input Slave with 8 Bytes of Input or Less**

$T_{RT} = 0.016 \times T_B \times S_{IN1} + 0.06 \times T_B + 0.05$ (ms)

$S_{IN1}$: Number of input words for the Input Slave
$T_B$: At 500 kbps = 2, 250 kbps = 4, 125 kbps = 8

**Mixed I/O Slave with 8 Bytes of Both Input and Output or Less**

$T_{RT} = 0.016 \times T_B \times (S_{OUT2} + S_{IN2}) + 0.11 \times T_B + 0.07$ (ms)

$S_{OUT2}$: Number of output words for the Mixed I/O Slave
$S_{IN2}$: Number of input words for the Mixed I/O Slave
$T_B$: At 500 kbps = 2, 250 kbps = 4, 125 kbps = 8

**Slave with more than 8 Bytes of Input or Output (or Both)**

$T_{RT} = T_{OH} + T_{BYTE\text{-}IN} \times B_{IN} + T_{BYTE\text{-}OUT} \times B_{OUT}$ (ms)

$T_{OH}$: Protocol overhead
$T_{BYTE\text{-}IN}$: Input byte transmission time
$B_{IN}$: Number of input bytes
$T_{BYTE\text{-}OUT}$: Output byte transmission time
$B_{OUT}$: Number of output bytes

| Communication speed | $T_{CH}$ | $T_{BYTE\text{-}IN}$ | $T_{BYTE\text{-}OUT}$ |
|---|---|---|---|
| 500 kbps | 0.306 ms | 0.040 ms | 0.036 ms |
| 250 kbps | 0.542 ms | 0.073 ms | 0.069 ms |
| 125 kbps | 1.014 ms | 0.139 ms | 0.135 ms |

If there are no Output Slaves, use 0 as the value of $B_{OUT}$. If there are no input Slaves, use 0 as the value of $B_{IN}$.

**Refresh Time**

The refresh time is the time required for I/O data to be exchanged between the PLC's CPU and the DeviceNet Master Unit. The PLC's cycle time is increased when a Master Unit is mounted, as shown below.

**Note** Refer to the PLC's Operation Manual for more details on the refresh time and the PLC's cycle time.

**Master Unit for CV-series PLCs (CVM1-DRM21)**

The PLC's cycle time is increased by 1.1 ms. This is the extra time required for CPU Bus Unit servicing (DeviceNet Master Unit refreshing).

**Master Unit for C200HX, C200HG, C200HE, and C200HS PLCs (C200HW-DRM21)**

The PLC's cycle time is increased by the amount shown below. The extra time is required for I/O refreshing.

| PLC | DeviceNet Unit I/O refreshing time (ms) |
|---|---|
| C200HX, C200HG, and C200HE | 1.72 + 0.022 × the number of words refreshed |
| C200HS | 2.27 + 0.077 × the number of words refreshed |

The number of words refreshed is the total number of words in the I/O area that are used by the Slaves, including any unused words between words actually used by the Slaves. For example, if there are only two Input Slaves with node numbers 1 and 5, the 5 input words for nodes 1 through 5 would be refreshed even though the input words for nodes 2, 3, and 4 are unused.

If message communications are being performed, just add the number of words used in message communications to the above number of words for whenever messages are being processed.

## 6-1-3 I/O Unit Interface Cycle Time

The I/O Unit interface cycle time is the time interval between the I/O processing of I/O Units in a MULTIPLE I/O TERMINAL and the next I/O processing for those I/O Units.

**Without a Special I/O Unit**

If there is not a Special I/O Unit, the I/O Unit interface cycle time can be calculated using the following formula:

$T_{CYCIF} = 1.5 \times MOD$ [ms]

MOD: Number of I/O data frames
If the total numbers of input bits and output bits are both 128 or less: MOD = 1
If the either the total number of input bits or the total number of output bits is more than 128: MOD = 2

**With a Special I/O Unit**

More frames are required with a Special I/O Unit. There will be one additional special I/O data frame per Special I/O Unit and one additional frame for checking the status of all the Special I/O Units. Therefore, the I/O Unit interface cycle time with a Special I/O Unit can be calculated using the following formula:

$T_{CYCIF} = 1.5 \times (MOD + N + 1)$ [ms]

MOD: Number of I/O data frames
If there is no ordinary I/O Unit:MOD = 0
If the total numbers of input bits and output bits are both 128 or less:MOD = 1
If the either the total number of input bits or the total number of output bits is more than 128: MOD = 2

N: Number of Special I/O Units (1 to 8)

# SECTION 7
# Troubleshooting and Maintenance

This section provides procedures for dealing with errors as well as basic maintenance procedures.


7-1 Normal Indication . . . . . 196
7-2 Troubleshooting . . . . . 197
7-3 Maintenance . . . . . 204
7-3-1 Cleaning . . . . . 204
7-3-2 Inspection . . . . . 204
7-3-3 Replacing Units . . . . . 205

# 7-1 Normal Indication

When a MULTIPLE I/O TERMINAL is operating normally, the status will be as follows:

**I/O Unit Interface Status**

During normal operation, the status of the I/O Unit interface is set in the first two words of the MULTIPLE I/O TERMINAL input area as shown in the following diagram.

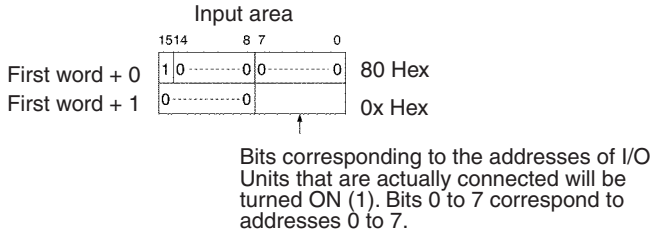


**Unit Indicators**

During normal operation, the front-panel indicators of each Unit will be as shown in the following diagram.

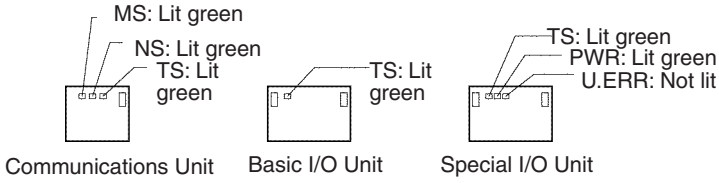

# 7-2 Troubleshooting

This section explains the causes of errors, how to determine their locations, and the actions to be taken when errors occur in a MULTIPLE I/O TERMINAL.

**Check Flowchart**

When an error occurs in a MULTIPLE I/O TERMINAL, use the following flowchart to find the cause of the error, determine its location, and take the appropriate action. The numbers correspond to the numbers in the tables beginning on page 198.

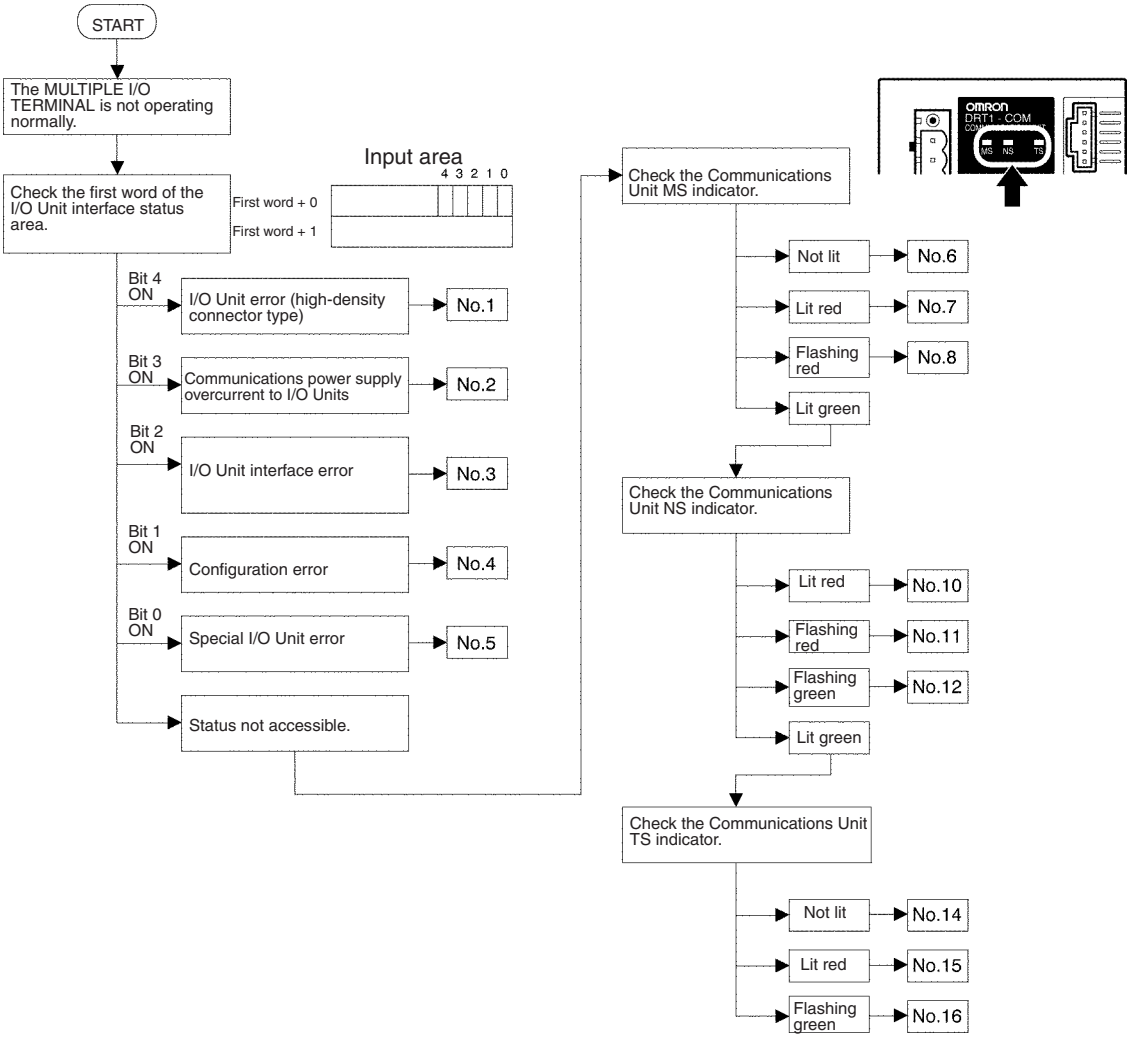


**Status Area Error Processing**

A MULTIPLE I/O TERMINAL status area is available in the first two words of the MULTIPLE I/O TERMINAL input area in the Master. The contents and causes of errors can be found by checking this area.

**Status Area Configuration**

The status area is configured as shown in the following diagram.

| | 15 … 8 | 7 … 0 |
|---|---|---|
| 0 wd | I/O Unit connection information | |
| +1 wd | Error I/O Unit addresses | Registered I/O Unit addresses |

### I/O Unit Connection Information

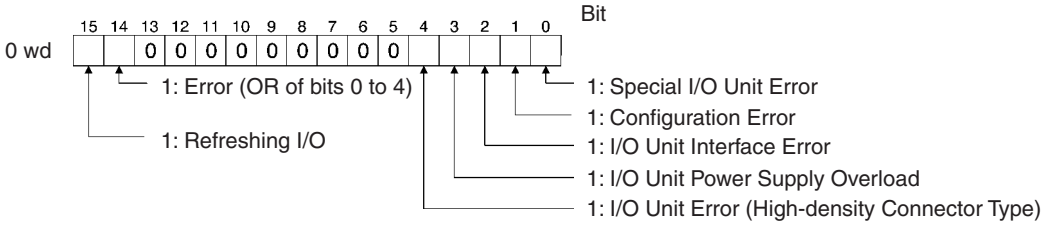


### Error and Registered I/O Unit Addresses

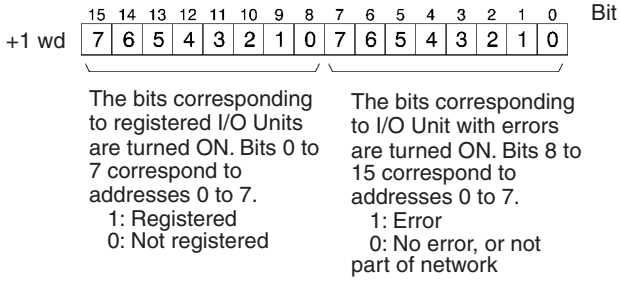


### Probable Causes of Errors and Countermeasures

Use the status area to determine the error content and the I/O Unit address where the error occurred, and then take action according to the following table.

| No. | Error content | Probable cause | Countermeasure |
|---|---|---|---|
| 1 | I/O Unit error (high-density connector type) | A hardware error has occurred in an I/O Unit. | Replace the I/O Unit in which the hardware error has occurred. |
| 2 | Communications power supply overcurrent to an I/O Unit | The power supply to the I/O Unit interface has shorted.<br>The current consumption of the I/O Unit interface exceeds 0.4 A. | Check that the I/O Unit communications cable has not shorted.<br>Check that the total current consumption of the communications power supply for the I/O Units does not exceed 0.4 A.<br>After taking the above measures, restart the Communications Unit. If the problem persists, replace the Communications Unit. |
| 3 | I/O Unit interface error | The end connector is not connected.<br>The I/O Unit Connecting Cable is broken.<br>There is a lot of noise.<br>Too many I/O Units are connected. | After turning OFF the power supply to the Communications Unit and all I/O Units, attach the end connector to the I/O Unit interface connector 2 on the terminal I/O Unit.<br>Replace the broken cable.<br>Remove the source of the noise.<br>Connect no more than 8 I/O Units for each Communications Unit.<br>After taking the above measures, restart the Communications Unit. If the problem persists, replace the Communications Unit. |
| 4 | Configuration error | The I/O Unit configuration was changed while the Communications Unit was turned ON. | After turning OFF the power supply to the Communications Unit and all I/O Units, return to the correct I/O Unit configuration, and restart the Communications Unit. If the problem persists, replace the Communications Unit. |
| 5 | Special I/O Unit error | A specific error, such as no operating power supply, has occurred in a Special I/O Unit. | Check the operating power supply, and provide the correct power supply. If the problem persists, replace the Special I/O Unit in which the error occurred. |

## Troubleshooting via Indicators

There are indicators that display the Unit status of each MULTIPLE I/O TERMINAL Unit. The contents and causes of errors can be found by checking these indicators.

### Indicator Meanings

| Unit | Indicator name | Meaning |
|---|---|---|
| Communications Unit | NS | Displays the DeviceNet communications status. |
| | MS | Displays the Communications Unit status. |
| | TS | Displays the I/O Unit interface status. |
| Basic I/O Unit | TS | Displays the I/O Unit interface status. |
| Special I/O Unit | TS | Displays the I/O Unit interface status. |
| | U.ERR | Displays the Special I/O Unit status. |
| | PWR | Displays the operating power supply status. |

In addition to the above indicators, some Units also have indicators that display the I/O status.

### Causes and Remedies for Communications Unit MS Indicator Errors

First use the Communications Unit MS indicator to check the status of the Communications Unit, and then take action according to the following table.

| No. | Communications Unit MS indicator status | Cause | Remedy |
|---|---|---|---|
| 6 | OFF MS | The power is not being supplied. | Check the operating power supply, and provide the correct power supply. If the problem persists, replace the Communications Unit. |
| 7 | ON (red) MS | A hardware error has occurred in the Communications Unit. | Restart the Communications Unit. If the problem persists, replace the Communications Unit. |
| 8 | Flashing (red) MS | The DIP switch setting of the Communications Unit is incorrect. | After checking the DIP switch setting (baud rate setting pins 7, 8, or 9) and resetting it correctly, restart the Communications Unit. If the problem persists, replace the Communications Unit. |
| 9 | ON (green) MS | No error | Proceed to the next item, *Causes and Remedies for Communications Unit NS indicator Errors*. |

### Causes and Remedies for Communications Unit NS Indicator Errors

Next use the NS indicator to check the status of the Communications Unit, and then take action in according to the following table.

| No. | Communications Unit NS indicator status | Cause | Remedy |
|---|---|---|---|
| 10 | ON (red) NS | The Unit is in Bus Off status.<br>A Slave already exits with the same node number as the Communications Unit.<br>The baud rate does not match that of the Master Unit. | Check the connection status of the DeviceNet communications cable or the noise status.<br>Reset the node number so that it is not duplicated.<br>Reset with the same baud rate as that of the Master Unit.<br>After taking the above measures, restart the Communications Unit. If the problem persists, replace the Communications Unit. |
| 11 | Flashing (red) NS | A timeout occurred in communications with the Master Unit. | Check the status of the Master Unit.<br>Check the connection status of the DeviceNet communications cable or the noise status.<br>After taking the above measures, restart the Communications Unit. If the problem persists, replace the Communications Unit. |
| 12 | Flashing (green) NS | The Master Unit has not been started correctly. | Check that the Master Unit has started normally. |
| | | There is a configuration error in the Master Unit I/O area. | Check that the number of I/O points for the Master Unit I/O area and the Communications Unit match. |
| 13 | ON (green) NS | No error | Proceed to the next item, *Causes and Remedies for Communications Unit and I/O Unit TS Indicator Errors*. |

### Causes and Remedies for Communications Unit and I/O Unit TS Indicator Errors

If there is no error after the MS indicator and NS indicator have been checked, use the TS indicator of each Unit to check the status of the Communications Unit and each I/O Unit, and then take action in according to the following table.

| No. | TS indicator status | | Cause | Remedy |
|---|---|---|---|---|
| | Communications Unit | I/O Units | | |
| 14 | TS OFF | TS TS TS TS TS<br>All I/O Unit TS indicators are not lit. | The power supply to the I/O Unit interface has shorted.<br>The current consumption of the I/O Unit interface exceeds 0.4 A. | Check that the I/O Unit communications cable has not shorted.<br>Check that the total current consumption of the communications power supply for the I/O Unit does not exceed 0.4 A.<br>After taking the above measures, restart the Communications Unit. |
| | | | The cable between the Communications Unit and the first I/O Unit is disconnected. | After turning OFF the power supply to the Communications Unit and all I/O Units, correctly connect the cable. |

| No. | TS indicator status | | Cause | Remedy |
|---|---|---|---|---|
| | Communications Unit | I/O Units | | |
| 15 | ON (red) (I/O Unit interface error) | Flashing (green) ON (red)<br>The TS indicators on the Units closer to the Communications Unit are flashing green and the indicators on the rest of the Units are lit red. | The cable is broken at the Unit where the TS indicator display changes. | After turning OFF the power supply to the Communications Unit and all I/O Units, replace the broken cable. |
| | | All I/O Unit TS indicators are lit red. | The cable between the Communications Unit and the first I/O Unit is broken. | |
| | | | There is a lot of noise. | Remove the source of the noise. |
| | | All I/O Unit TS indicators are lit green. | The end connector is not connected. | After turning OFF the power supply to the Communications Unit and all I/O Units, attach the end connector to the I/O Unit interface connector 2 of the terminal I/O Unit. |
| | | | The cable connected to the Remote Terminal Unit I/O Unit interface connector 1 is broken. | After turning OFF the power supply to the Communications Unit and all I/O Units, perform a continuity test on the cable, and replace the broken cable. |
| | | Flashing (green) OFF<br>The TS indicators on the Units closer to the Communications Unit are flashing green and the indicators on the rest of the Units are not lit. | The I/O Unit configuration changed after the Unit where the TS indicator display changed. | After turning OFF the power supply to the Communications Unit and all I/O Units, return to the correct I/O Unit configuration, and restart the Communications Unit. |
| | | | At the last Unit where the green light is flashing, one of the cables is broken. | After turning OFF the power supply to the Communications Unit and all I/O Units, check the connection status of the cable. If the problem persists, replace the cable after turning OFF the power supply to the Communications Unit and all I/O Units. |
| | | | I/O Unit interface connector 2 are connected at the Unit where the TS indicator display changed. | After turning OFF the power supply to the Communications Unit and all I/O Units, correctly reconnect the cable. |
| 16 | Flashing (green) (Special I/O Unit error) | ON (green)<br>U.ERR<br>There is a Special I/O Unit with the TS and U.ERR indicators lit red. | A specific error, such no operating power supply, has occurred in a Special I/O Unit. | Check the operating power supply, and provide the correct power supply. If the problem persists, replace the Special I/O Unit in which the error occurred. |

**Causes and Remedies for Other Types of Errors**

| Error | Probable cause |
|---|---|
| After the MS indicator turns green, the NS indicator doesn't flash green - it turns red immediately. | Restart the faulty Slave Unit after checking the following points.<br>• Make sure that the Master and Slaves baud rate settings all match. If they don't match, set all of the baud rates to the same value.<br>• Check for a node number duplication. If necessary change the node number settings so that each node has a unique number.<br>• See the troubleshooting steps below under the error heading: "The NS indicator lights green but turns red after a short time."<br>• If a particular Slave's NS indicator is always red, replace that Slave. |
| The NS indicator lights green but turns red after a short time<br>**or**<br>The NS indicator lights green but starts flashing red after a short time. | Restart the faulty Slave Unit after checking the following points.<br>• Make sure that there are121-Ω terminators connected at both ends of the trunk line. Connect 121-Ω terminators if the wrong resistance is being used.<br>• Check whether all of the Slaves' settings are correct.<br>• Check whether the communications cables are wired correctly.<br>• Check whether the power supply is set correctly.<br>• Check all the nodes for broken wires in the communications and power supply cables attached to the connectors.<br>• Check whether power is correctly supplied to the network.<br>• If there is nearby equipment that generates electrical noise, take steps to shield the Master, Slaves, and communications cables from the noise.<br>• If an error has occurred with OMRON's Master Unit, refer to the *DeviceNet Operation Manual (W267)*. If an error has occurred in a Master Unit supplied by another maker, refer to the relevant user's manual.<br>• If a particular Slave's NS indicator is always red, replace that Slave. |

### Trouble Adding a Slave to the Network

| Error | Probable cause |
|---|---|
| The NS indicator remains OFF. | • Check if the baud rate of the Master Unit coincides with that of the Slave Unit. If the baud rates are different, correct the baud rate of the Slave Unit.<br>• Check that the Slave's connector is connected correctly.<br>• Check whether the communications power supply is supplying 24 VDC.<br>• Make sure that the Master is operating properly.<br>When using an OMRON Master, refer to the *DeviceNet Operation Manual (W267)*.<br>When using another company's Master Unit, refer to that Master's user's manual.<br>• Check whether the communications cables are wired correctly.<br>• Check whether the power supply is set correctly.<br>• Check for broken wires in the communications and power supply cables attached to the connectors. |

| Error | Probable cause |
|---|---|
| The NS indicator continues to flash green. | • Make sure that the Master is operating properly.<br>When using an OMRON Master, refer to the *DeviceNet Operation Manual (W267)*.<br>When using another company's Master Unit, refer to that Master's user's manual.<br>• Check whether the Slave is registered in the Master's scan list.<br>If an OMRON Master Unit is being used, a new Slave cannot be added to the network if the Master is operating with the scan list enabled. First perform the clear scan list operation, check that the Slave has joined the network, and then perform the create scan list operation.<br>If another company's Master Unit is being used, refer to that Master's user's manual for details on adding a new Slave to its scan list. |
| The NS indicator alternates between being green and flashing green, or alternates between flashing red and flashing green. | • When using an OMRON Master, check the following items and perform the necessary error processing steps.<br>→ Register the scan list again.<br>(After performing the clear scan list operation, check that the Slave has joined the network and perform the create scan list operation.)<br>→ Make sure that the Slave's allocated I/O area doesn't overlap with that of another Slave. If there is an overlap, change the Slave's node number to eliminate it.<br>→ Make sure that the allocated I/O area doesn't exceed the allowed range shown below:<br>C200HW-DRM21-V1 Output: IR 050 to IR 099<br>Input: IR 350 to IR 399<br>If the I/O area exceeds this range, change the Slave's node number to correct the problem.<br>• When using another company's Master Unit, check that the I/O size registered in the Master's scan list matches the actual I/O size of the Slave.<br>The I/O size is recorded in the following attributes of the connection object:<br>Interface 2 (Polled I/O Connection)<br>Produced Connection size (Input size)<br>Consumed Connection size (Output size)<br>and:<br>Interface 3 (Bit strobed I/O Connection)<br>Produced Connection size (Input size)<br><br>See *Appendix C Multi-vendor Usage* for details and record the correct value in the Master's scan list. Refer to the Master's manual for details on registering the values. |

# 7-3 Maintenance

This section describes the routine cleaning and inspection recommended as regular maintenance.

## 7-3-1 Cleaning

Clean the DeviceNet Units regularly as described below in order to keep it in its optimal operating condition.

- Wipe the Unit with a dry, soft cloth for regular cleaning.
- When a spot can't be removed with a dry cloth, dampen the cloth with a neutral cleanser, wring out the cloth, and wipe the Unit.
- A smudge may remain on the Unit from gum, vinyl, or tape that was left on for a long time. Remove the smudge when cleaning.

⚠ **Caution** Never use volatile solvents such as paint thinner or benzene or chemical wipes. These substances could damage the surface of the Unit.

## 7-3-2 Inspection

Be sure to inspect the system periodically to keep it in its optimal operating condition. In general, inspect the system once every 6 to 12 months, but inspect more frequently if the system is used with high temperature or humidity or under dirty/dusty conditions.

**Inspection Equipment**

Prepare the following equipment before inspecting the system.

**Required Equipment**

Have a standard and phillips-head screwdriver, multimeter, alcohol, and a clean cloth.

**Equipment that could be needed**

Depending on the system conditions, a synchroscope, oscilloscope, thermometer, or hygrometer (to measure humidity) might be needed.

**Inspection Procedure**

Check the items in the following table and correct any items that are below standard.

| Item | | Standard | Equipment |
|---|---|---|---|
| Environmental conditions | Ambient and cabinet temperature | See below. | Thermometer |
| | Ambient and cabinet humidity | See below. | Hygrometer |
| | Dust/dirt accumulation | None | --- |
| Installation | Are the Units installed securely? | No looseness | --- |
| | Are the communications connectors fully inserted? | No looseness | --- |
| | Are the external wiring screws tight? | No looseness | --- |
| | Are the connecting cables undamaged? | No damage | --- |

The following table shows the acceptable temperature and humidity ranges for DeviceNet Units.

| Unit | Acceptable temperature | Acceptable humidity* |
|---|---|---|
| Master Unit | 0°C to 55°C | 10% to 90% |
| MULTIPLE I/O TERMINAL (Communications Unit, I/O Units) | –10°C to 55°C | 25% to 85% |

## 7-3-3 Replacing Units

The DeviceNet Master Unit and Slave Units make up the network. The entire network is affected when a Unit is faulty, so a faulty Unit must be repaired or replaced quickly. We recommend having spare Units available to restore network operation as quickly as possible.

**Precautions**

Observe the following precautions when replacing a faulty Unit.

- After replacement make sure that there are no errors with the new Unit.
- When a Unit is being returned for repair, attach a sheet of paper detailing the problem and return the Unit to your OMRON dealer.
- If there is a faulty contact, try wiping the contact with a clean, lint-free cloth dampened with alcohol.

**Note** To prevent electric shock when replacing a Unit, be sure to turn OFF the power supplies to all of the nodes (Master and Slaves) before removing the faulty Unit.

**Resetting after Replacing Units**

After replacing a Unit, set the new Unit's switches to the same settings that were on the old Unit. Also, if using a Configurator to set the Analog Input Unit, Analog Output Unit, or Temperature Input Unit, be sure to set them to the same settings as before.

**Settings after Replacing Master Units**

The scan list (network file) must be registered after replacing a Master Unit. Use the following procedures.

**Default Remote I/O Allocations**

Turn ON power to all Slaves and then turn ON the Scan List Enable software switch (bit 00). The scan list will be registered.

**User-set Remote I/O Allocations**

Perform one of the following procedures.

**Using a Network File**

The following procedure can be used to write the scan list to the Master Unit from a network file saved on a disk.

***1,2,3...***

1. Turn ON power to the Master Unit and the Configurator.
2. Place the Configurator online and read the network file that was previously saved.
3. Use the device parameter editing operation, specify the Master Unit that has been replaced, and write the scan list in the network file to the Master Unit.

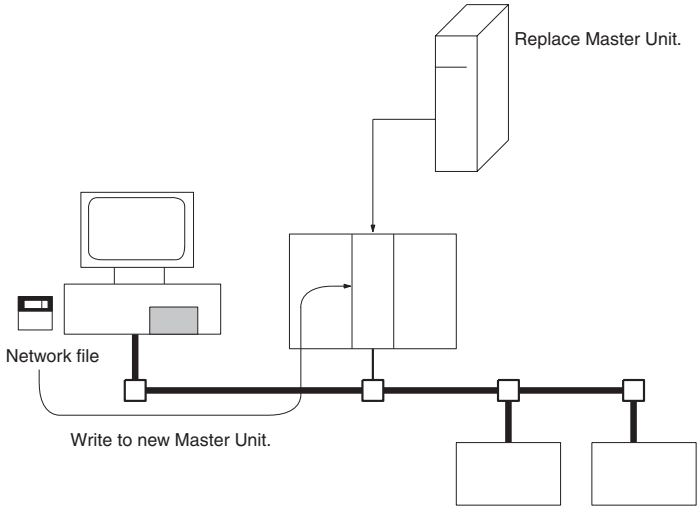

**Recreating the Allocations from the Configurator**

The following procedure can be used to recreate user-set allocations and write them to the Master Unit.

***1,2,3...***

1. Turn ON power to the Master Unit, Slaves, and Configurator.
2. Place the Configurator online and create the device list.
3. Specify the Master Unit, register Slaves using the device parameter editing operation, and allocate I/O.
4. Write the scan list to the Master Unit.

**Note** You should always save the network file to a disk when using user-set remote I/O allocations so that the scan list and other parameters are available should you need to replace a Master Unit.

**Replacing Relays for the Relay Output Unit**

With the Relay Output Unit (GT1-ROP08, GT1-ROS16), malfunctioning Relays can be replaced.

The following Relays can be replaced:

GT1-ROP08: G2R-1-SN Power Relay
GT1-ROS16: G6D-1A Miniature Relay

Use the following procedure to replace Relays. Here, the GT1-ROS16 is used as an example. The same general procedure applies to the GT1-ROP08.

**Note** Check that the internal power supply for the Relay Output Unit, and the power supplies for the I/O and I/O Interface Units are all OFF before performing Relay replacement.

***1,2,3...***

1. Push the lever for the Relay to be replaced and remove the Relay. The Relays are arranged in order, with the corresponding contact numbers increasing from left to right. Push the lever gently so that the detached Relay does not spring out suddenly.

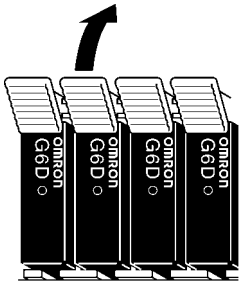


2. Insert the new Relay, pushing it into the slot as far as possible. Check the positioning of the pin in the Relay with respect to the Relay Output Unit, and be careful to replace the Relay with the correct orientation. When replacing the Relay, try to keep it as parallel as possible to the plane of the Unit. When inserting the Relay, push it gently and check whether the Relay is inside the slot. If the Relay does not enter the slot properly when pushed gently, it means that the pin is not aligned properly. In this case, remove the Relay and start again. If the pin appears to have entered the slot properly, push the Relay into the slot as far as it will go.

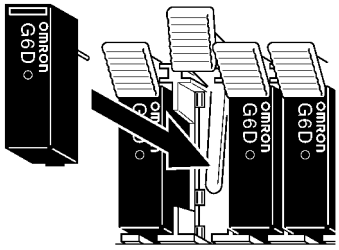


3. When the Relay has been pushed inside as far as it will go, raise the lever so that it is covering the top of the Relay.

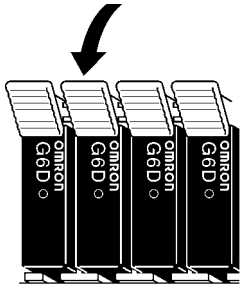


**Replacing the Cassette**

With the following Units, a malfunctioning Cassette can be replaced.

| | |
|---|---|
| Transistor Input Units (with terminal block): | GT1-ID16, GT1-ID16-1 |
| Transistor Output Units (with terminal block): | GT1-OD16, GT1-OD16-1 |
| Analog Input Unit (with terminal block): | GT1-AD04 |
| Analog Output Unit (with terminal block): | GT1-DA04 |
| Temperature Input Unit: | GT1-TS04T, GT1-TS04P |

**Note**

1. Check that the internal power supply for the I/O Unit and the power supplies for the I/O and I/O Interface Units are all OFF before performing Cassette replacement.
2. Other I/O Units are not designed to house a Cassette. In order to avoid trying to attach a Cassette to an incompatible Unit, check the I/O Unit first.

Use the following procedure to replace the Cassette. The GT1-AD04 is used as an example. The same general procedure applies to other Units.

***1,2,3...***

1. For the Analog Input and Output Units, as well as the Temperature Input Unit, with the top part of the Cassette pressed down, pull the Cassette outwards (see diagram below). For the Transistor Input and Output Units, with the bottom part of the Cassette pressed up, pull the Cassette outwards.

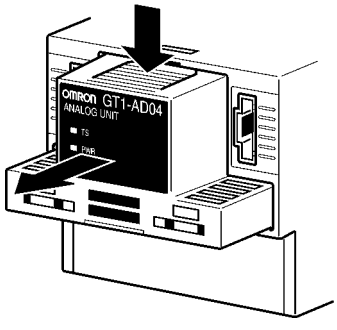


2. Insert the new Cassette as far as possible into the space, taking care about its orientation. After doing so, try to gently pull the Cassette outwards to check whether it is secure.

# Appendix A
# Slave Device Profiles

Refer to the Slave specifications and Device profiles in this manual when connecting an OMRON Slave Unit to another company's Master.

## DRT1-COM Communications Unit Device Profile

| | | | |
|---|---|---|---|
| General data | Compatible DeviceNet Specifications | Volume I - Release 1.3<br>Volume II - Release 1.3 | |
| | Vendor name | OMRON Corporation | Vendor ID = 47 |
| | Device type name | Slaves:<br>Communication adapter | Device type number = 12 |
| | Manufacturer catalog number | Manual number (W267) | |
| | Manufacturer revision | 1.0 | |
| Physical conformance data | Network current consumption | 24 VDC at 30 mA max. | |
| | Connector type | Open plug | |
| | Physical insulation | Yes | |
| | Supported indicators | Module, Network | |
| | MAC ID setting | DIP switch | |
| | Default MAC ID | 0 | |
| | Baud rate setting | DIP switch | |
| | Supported baud rates | 125 kbps, 250 kbps, and 500 kbps | |
| Communications data | Predefined Master/Slave connection set | Group 2 only server | |
| | Dynamic connection support (UCMM) | No | |
| | Explicit message fragmentation support | Yes | |

## Object Mounting

### Identity Object (0x01)

| | | |
|---|---|---|
| Object class | Attribute | Not supported |
| | Service | Not supported |

| Item | | ID content | Get (read) | Set (write) | Value |
|---|---|---|---|---|---|
| Object instance | Attribute | 1 Vendor | Yes | No | 47 |
| | | 2 Product type | Yes | No | 12 |
| | | 3 Product code | Yes | No | 306 |
| | | 4 Revision | Yes | No | 1.3 |
| | | 5 Status (bits supported) | Yes | No | Bit 0 only |
| | | 6 Serial number | Yes | No | Unique for each Unit |
| | | 7 Product name | Yes | No | DRT1-COM |
| | | 8 State | No | No | --- |

| Item | | DeviceNet service | Parameter option |
|---|---|---|---|
| Object instance | Service | 05 Reset | No |
| | | 0E Get_Attribute_Single | No |

## Message Router Object (0x02)

| | | |
|---|---|---|
| Object class | Attribute | Not supported |
| | Service | Not supported |
| Object instance | Attribute | Not supported |
| | Service | Not supported |
| Vendor specification addition | | No |

## DeviceNet Object (0x03)

| | | |
|---|---|---|
| Object class | Attribute | Not supported |
| | Service | Not supported |

| Item | | ID content | Get (read) | Set (write) | Value |
|---|---|---|---|---|---|
| Object instance | Attribute | 1 MAC ID | Yes | No | --- |
| | | 2 Baud rate | Yes | No | --- |
| | | 3 BOI | Yes | No | 0000 Hex |
| | | 4 Bus Off counter | Yes | No | --- |
| | | 5 Allocation information | Yes | No | --- |
| | | 6 MAC ID switch changed | No | No | --- |
| | | 7 Baud rate switch changed | No | No | --- |
| | | 8 MAC ID switch value | No | No | --- |
| | | 9 Baud rate switch value | --- | --- | --- |

| Item | | DeviceNet service | Parameter option |
|---|---|---|---|
| Object instance | Service | 0E Get_Attribute_Single | No |
| | | 4B Allocate_Master/Slave_Connection_Set | No |
| | | 4C Release_Master/Slave_Connection_Set | No |

## Connection Object (0x05)

| | | |
|---|---|---|
| Object class | Attribute | Not supported |
| | Service | Not supported |
| | Max. number of active connections | 1 |

| Item | Section | Information | Max. number of instances |
|---|---|---|---|
| Object instance 1 | Instance type | Explicit Message | 1 |
| | Production trigger | Cyclic | --- |
| | Transport type | Server | --- |
| | Transport class | 3 | --- |

| Item | | ID content | Get (read) | Set (write) | Value |
|---|---|---|---|---|---|
| Object instance 1 | Attribute | 1 State | Yes | No | --- |
| | | 2 Instance type | Yes | No | 0000 Hex |
| | | 3 Transport class trigger | Yes | No | 8300 Hex |
| | | 4 Produced connection ID | Yes | No | --- |
| | | 5 Consumed connection ID | Yes | No | --- |
| | | 6 Initial comm. characteristics | Yes | No | 2100 Hex |
| | | 7 Produced connection size | Yes | No | FF00 Hex |
| | | 8 Consumed connection size | Yes | No | FF00 Hex |
| | | 9 Expected packet rate | Yes | Yes | --- |
| | | 12 Watchdog time-out action | Yes | Yes | 1 or 3 |
| | | 13 Produced connection path length | Yes | No | 0000 Hex |
| | | 14 Produced connection path | Yes | No | --- |
| | | 15 Consumed connection path length | Yes | No | 0000 Hex |
| | | 16 Consumed connection path | Yes | No | --- |
| | | 17 Production inhibit time | Yes | No | 0000 Hex |

| Item | | DeviceNet service | Parameter option |
|---|---|---|---|
| Object instance 1 | Service | 05 Reset | No |
| | | 0E Get_Attribute_Single | No |
| | | 10 Set_Attribute_Single | No |

| Item | Section | Information | Max. number of instances |
|---|---|---|---|
| Object instance 2 | Instance type | Polled I/O | 1 |
| | Production trigger | Cyclic | --- |
| | Transport type | Server | --- |
| | Transport class | 2 | --- |

| Item | | ID content | Get (read) | Set (write) | Value |
|---|---|---|---|---|---|
| Object instance 2 | Attribute | 1 State | Yes | No | --- |
| | | 2 Instance type | Yes | No | 0100 Hex |
| | | 3 Transport class trigger | Yes | No | 8200 Hex |
| | | 4 Produced connection ID | Yes | No | --- |
| | | 5 Consumed connection ID | Yes | No | --- |
| | | 6 Initial comm. characteristics | Yes | No | 0100 Hex |
| | | 7 Produced connection size | Yes | No | See note. |
| | | 8 Consumed connection size | Yes | No | See note. |
| | | 9 Expected packet rate | Yes | Yes | --- |
| | | 12 Watchdog time-out action | Yes | Yes | 1 or 3 |
| | | 13 Produced connection path length | Yes | No | 0000 Hex |
| | | 14 Produced connection path | Yes | No | No |
| | | 15 Consumed connection path length | Yes | No | 0000 Hex |
| | | 16 Consumed connection path | Yes | No | No |
| | | 17 Production inhibit time | Yes | No | 0000 Hex |

| Item | | DeviceNet service | Parameter option |
|---|---|---|---|
| Object instance 2 | Service | 0E Get_Attribute_Single | No |
| | | 10 Set_Attribute_Single | No |

**Note** The values for produced connection size and consumed connection size will be the respective totals for all the I/O Units connected to the Communications Unit. The following table lists the values for each I/O Unit.

| Model | Produced connection size | Consumed connection size |
|---|---|---|
| DRT1-COM | 0400 Hex | 0000 Hex |
| GT1-ID16(-1) | 0200 Hex | 0000 Hex |
| GT1-ID16MX(-1) | 0200 Hex | 0000 Hex |
| GT1-ID16ML(-1) | 0200 Hex | 0000 Hex |
| GT1-ID16DS(-1) | 0200 Hex | 0000 Hex |
| GT1-ID32ML(-1) | 0400 Hex | 0000 Hex |
| GT1-OD16(-1) | 0000 Hex | 0200 Hex |
| GT1-OD16MX(-1) | 0000 Hex | 0200 Hex |
| GT1-OD16ML(-1) | 0000 Hex | 0200 Hex |
| GT1-OD16DS(-1) | 0000 Hex | 0200 Hex |
| GT1-OD32ML(-1) | 0000 Hex | 0400 Hex |
| GT1-ROS16 | 0000 Hex | 0200 Hex |
| GT1-ROP08 | 0000 Hex | 0200 Hex |
| GT1-AD04 | 0800 Hex | 0000 Hex |
| GT1-AD08MX (set for 4 inputs) | 0800 Hex | 0000 Hex |
| GT1-AD08MX (set for 8 inputs) | 1000 Hex | 0000 Hex |
| GT1-DA04 | 0000 Hex | 0800 Hex |
| GT1-DA04MX | 0000 Hex | 0800 Hex |
| GT1-TS04T/P (Normal Mode) | 0800 Hex | 0000 Hex |
| GT1-TS04T/P (2-decimal-place Mode) | 1000 Hex | 0000 Hex |
| GT1-CT01 | 0600 Hex | 0600 Hex |

| Item | Section | Information | Max. number of instances |
|---|---|---|---|
| Object instance 3 | Instance type | Bit strobed I/O | 1 |
| | Production trigger | Cyclic | --- |
| | Transport type | Server | --- |
| | Transport class | 2 | --- |

| Item | | ID content | Get (read) | Set (write) | Value |
|---|---|---|---|---|---|
| Object instance 3 | Attribute | 1 State | Yes | No | --- |
| | | 2 Instance type | Yes | No | 0100 Hex |
| | | 3 Transport class trigger | Yes | No | 8200 Hex |
| | | 4 Produced connection ID | Yes | No | --- |
| | | 5 Consumed connection ID | Yes | No | --- |
| | | 6 Initial comm. characteristics | Yes | No | 0100 Hex |
| | | 7 Produced connection size | Yes | No | See note. |
| | | 8 Consumed connection size | Yes | No | 0800 Hex |
| | | 9 Expected packet rate | Yes | Yes | --- |
| | | 12 Watchdog time-out action | Yes | Yes | 1 or 3 |
| | | 13 Produced connection path length | Yes | No | 0000 Hex |
| | | 14 Produced connection path | Yes | No | No |
| | | 15 Consumed connection path length | Yes | No | 0000 Hex |
| | | 16 Consumed connection path | Yes | No | No |
| | | 17 Production inhibit time | Yes | No | 0000 Hex |

| Item | | DeviceNet service | Parameter option |
|---|---|---|---|
| Object instance 3 | Service | 0E Get_Attribute_Single | No |
| | | 10 Set_Attribute_Single | No |

**Note** The values for produced connection size and consumed connection size will be the respective totals for all the I/O Units connected to the Communications Unit. The following table lists the values for each I/O Unit. Only the following Units are applicable because the Bit Strobed I/O is valid only when OUT is 0 bytes and IN is 8 bytes or less.

| Model | Produced connection size |
|---|---|
| DRT1-COM | 0400 Hex |
| GT1-ID16(-1) | 0200 Hex |
| GT1-ID16MX(-1) | 0200 Hex |
| GT1-ID16ML(-1) | 0200 Hex |
| GT1-ID16DS(-1) | 0200 Hex |
| GT1-ID32ML(-1) | 0400 Hex |
| GT1-AD04 | 0800 Hex |
| GT1-AD08MX (set for 4 inputs) | 0800 Hex |
| GT1-AD08MX (set for 8 inputs) | 1000 Hex |
| GT1-TS04T/P (Normal Mode) | 0800 Hex |
| GT1-TS04T/P (2-decimal-place Mode) | 1000 Hex |

# Appendix B

## Connectable Devices

## Devices

### MULTIPLE I/O TERMINAL Units

| Model | Specifications | Manufacturer |
|---|---|---|
| DRT1-COM | Communications Unit<br>Two input words (status) | OMRON |
| GT1-ID16 | Transistor Input Unit (terminal block)<br>16 transistor inputs (for NPN outputs) | OMRON |
| GT1-ID16-1 | Transistor Input Unit (terminal block)<br>16 transistor inputs (for PNP outputs) | OMRON |
| GT1-ID16MX | Transistor Input Unit (Molex connector)<br>16 transistor inputs (for NPN outputs) | OMRON |
| GT1-ID16MX-1 | Transistor Input Unit (Molex connector)<br>16 transistor inputs (for PNP outputs) | OMRON |
| GT1-ID16ML | Transistor Input Unit (Fujitsu connector)<br>16 transistor inputs (for NPN outputs) | OMRON |
| GT1-ID16ML-1 | Transistor Input Unit (Fujitsu connector)<br>16 transistor inputs (for PNP outputs) | OMRON |
| GT1-ID16DS | Transistor Input Unit (25-pin D-sub connector)<br>16 transistor inputs (for NPN outputs) | OMRON |
| GT1-ID16DS-1 | Transistor Input Unit (25-pin D-sub connector)<br>16 transistor inputs (for PNP outputs) | OMRON |
| GT1-ID32ML | Transistor Input Unit (Fujitsu high-density connector)<br>32 transistor inputs (for NPN outputs) | OMRON |
| GT1-ID32ML-1 | Transistor Input Unit (Fujitsu high-density connector)<br>32 transistor inputs (for PNP outputs) | OMRON |
| GT1-OD16 | Transistor Output Unit (terminal block)<br>16 transistor outputs (for NPN outputs) | OMRON |
| GT1-OD16-1 | Transistor Output Unit (terminal block)<br>16 transistor outputs (for PNP outputs) | OMRON |
| GT1-OD16MX | Transistor Output Unit (Molex connector)<br>16 transistor outputs (for NPN outputs) | OMRON |
| GT1-OD16MX-1 | Transistor Output Unit (Molex connector)<br>16 transistor outputs (for PNP outputs) | OMRON |
| GT1-OD16ML | Transistor Output Unit (Fujitsu connector)<br>16 transistor outputs (for NPN outputs) | OMRON |
| GT1-OD16ML-1 | Transistor Output Unit (Fujitsu connector)<br>16 transistor outputs (for PNP outputs) | OMRON |
| GT1-OD16DS | Transistor Output Unit (25-pin D-sub connector)<br>16 transistor outputs (for NPN outputs) | OMRON |
| GT1-OD16DS-1 | Transistor Output Unit (25-pin D-sub connector)<br>16 transistor outputs (for PNP outputs) | OMRON |
| GT1-OD32ML | Transistor Output Unit (Fujitsu high-density connector)<br>32 transistor outputs (for NPN outputs) | OMRON |
| GT1-OD32ML-1 | Transistor Output Unit (high-density connector)<br>32 transistor outputs (for PNP outputs) | OMRON |
| GT1-ROP08 | Relay Output Unit (power relays)<br>8 relay outputs (allocated 1 word) | OMRON |

| Model | Specifications | Manufacturer |
|---|---|---|
| GT1-ROS16 | Relay Output Unit (miniature relays)<br>16 relay outputs | OMRON |
| GT1-AD04 | Analog Input Unit (terminal block)<br>4 inputs (allocated 4 words) | OMRON |
| GT1-AD08MX | Analog Input Unit (Molex connector)<br>8 inputs (allocated 8 words) or<br>4 inputs (allocated 4 words)<br>(Select using the DIP switch.) | OMRON |
| GT1-DA04 | Analog Output Unit (terminal block)<br>8 outputs (allocated 4 words) | OMRON |
| GT1-DA04MX | Analog Output Unit (Molex connector)<br>4 outputs (allocated 4 words) | OMRON |
| GT1-TS04T | Temperature Input Unit<br>4 inputs (allocated 4 or 8 words)<br>(Select using the DIP switch.)<br>Input types: R, S, K, J, T, B, L | OMRON |
| GT1-TS04P | Temperature Input Unit<br>4 inputs (allocated 4 or 8 words)<br>(Select using the DIP switch.)<br>Input types: Pt100, JPt100 | OMRON |
| GT1-CT01 | Counter Unit (terminal block)<br>1 encoder input (Encoder A, B, Z)<br>1 external input, 2 external outputs<br>(input 3 words/output 3 words allocated) | OMRON |

## Communications Cables

| Model | Specifications | Manufacturer |
|---|---|---|
| DCA2-5C10 | Thick cable: 5 wires, 100 m | OMRON |
| DCA1-5C10 | Thin cable: 5 wires, 100 m | OMRON |
| DVN18-10G | Thick cable: 5 wires, 10 m | Nihon Wire & Cable |
| DVN18-30G | Thick cable: 5 wires, 30 m | Nihon Wire & Cable |
| DVN18-50G | Thick cable: 5 wires, 50 m | Nihon Wire & Cable |
| DVN18-100G | Thick cable: 5 wires, 100 m | Nihon Wire & Cable |
| DVN18-300G | Thick cable: 5 wires, 300 m | Nihon Wire & Cable |
| DVN18-500G | Thick cable: 5 wires, 500 m | Nihon Wire & Cable |
| DVN24-10G | Thin cable: 5 wires, 10 m | Nihon Wire & Cable |
| DVN24-30G | Thin cable: 5 wires, 30 m | Nihon Wire & Cable |
| DVN24-50G | Thin cable: 5 wires, 50 m | Nihon Wire & Cable |
| DVN24-100G | Thin cable: 5 wires, 100 m | Nihon Wire & Cable |
| DVN24-300G | Thin cable: 5 wires, 300 m | Nihon Wire & Cable |
| DVN24-500G | Thin cable: 5 wires, 500 m | Nihon Wire & Cable |
| 1485C-P1-A50 | Thick cable: 5 wires, 50 m | Allen-Bradley (See note.) |
| 1485C-P1-C150 | Thin cable: 5 wires, 150 m | Allen-Bradley (See note.) |

**Note** 1. The cables made by Nihon Wire & Cable Company Ltd. are sold through the FA STORE Co., Ltd. The product specifications are identical to the OMRON cable specifications.

2. The cables made by Allen-Bradley are stiffer than the cables made by OMRON and Nihon Wire & Cable Company Ltd., so do not bend the Allen-Bradley cables as much as the others.

## Connectors

| Model | Specifications | Manufacturer |
|---|---|---|
| MSTB2.5/5-ST-5.08AU | For node connection<br>Without connector set screws<br>(Attach to DRT1-ID08(-1), -ID16(-1), -OD08(-1), -OD16(-1), -ID16X(-1), -OD16X(-1), -HD16S, -ND16S, -AD04, -AD04H, -DA02, -TS04T, -TS04P) | Phoenix Contact K.K.<br>Reference No: 1752399 |

## Connector Screwdriver

| Model | Specifications | Manufacturer |
|---|---|---|
| SZF-1 | Special screwdriver for DeviceNet connectors | Phoenix Contact K.K. |

## Terminating Resistors

| Model | Specifications | Manufacturer |
|---|---|---|
| DRS1-T | Terminal-block Terminating Resistor, 121 Ω | OMRON |

**Note** Also can be used as Terminating Resistor with T-branch Tap.

## T-branch Tap

| Model | Specifications | Manufacturer |
|---|---|---|
| DCN1-1C | 3 connectors provided (When used on trunk line, 1 drop line can be connected.)<br>Terminating Resistor can be connected. | OMRON |
| DCN1-3C | 5 connectors provided (When used on trunk line, 3 drop lines can be connected.)<br>Terminating Resistor can be connected. | OMRON |

## Power Supply Tap

| Model | Specifications | Manufacturer |
|---|---|---|
| DCN1-1P | Power supply 1-branch tap with 2 connectors (provided) | OMRON |
| 1485T-P2T5-T5 | Required when connecting more than one power supply.<br>Countercurrent flow prevention, ground terminal provided | Allen-Bradley |

## I/O Unit Connecting Cables for MULTIPLE I/O TERMINAL Units

| Model | Specifications | Manufacturer |
|---|---|---|
| (Provided with I/O Units) | Cable length: 40 mm | OMRON |
| (Provided with Communications Unit) | End connector | |
| GCN1-010 | Cable length: 0.1 m | |
| GCN1-030 | Cable length: 0.3 m | |
| GCN1-040 | Cable length: 0.4 m | |
| GCN1-050 | Cable length: 0.5 m | |
| GCN1-060 | Cable length: 0.6 m | |
| GCN1-100 | Cable length: 1.0 m | |

## Applicable Connectors for MULTIPLE I/O TERMINAL Units

| Model number | Type | | | Remarks |
|---|---|---|---|---|
| 51030-0330 | Connector made by MOLEX | Crimp | Housing | |
| 70058-0004 | | | Reeled contacts | For AWG#24 to 30 |
| 70058-0022 | | | | For AWG#22 to 24 |
| 70058-0204 | | | Loose contacts | For AWG#24 to 30 |
| 70058-0272 | | | | For AWG#22 to 24 |
| 57036-5000 | | | Crimping tool | For AWG#22 to 26 |
| 57037-5000 | | | | For AWG#24 to 30 |
| XW2S-2513 | Recommended 25-pin D-sub connector made by OMRON | Hood | | |
| XW2A-2501 | | Plug | | |

## High-density Connector Cables for MULTIPLE I/O TERMINAL Units

| Model | Unit connected | Manufacturer |
|---|---|---|
| G79-□□□C | GT1-ID16ML<br>↕<br>I/O Block (G7TC-I□16) | OMRON |
| | GT1-OD16ML<br>↕<br>I/O Block (G7TC-OC16, G70D-SOC16, G70D-FOM16, G70A-ZOC16-3, M7F) | |
| | GT1-OD16ML-1<br>↕<br>I/O Block (G7TC-OC16-1, G70D-SOC16-1, G70D-FOM16-1, G70A-ZOC16-4, M7F) | |
| G79-I□C-□ | GT1-ID32ML<br>↕<br>I/O Block (G7TC-I□16) | |
| G79-O□C-□ | GT1-OD32ML<br>↕<br>I/O Block (G7TC-OC16, G7TC-OC08 G70D-SOC16, G70A-ZOC16-3, G7A-FOM16, M7F) | |
| | GT1-OD32ML-1<br>↕<br>I/O Block (G7TC-OC16-1, G70D-SOC16-1, G70D-FOM16-1, G70A-ZOC16-4) | |
| XW2Z-□□□A | GT1-ID16ML(-1), GT1-OD16ML(-1)<br>↕<br>Connector-Terminal Block Conversion Unit (XW2B-20G4, XW2B-20G5) | |
| XW2Z-□□□B | GT1-ID32ML(-1), GT1-OD32ML(-1)<br>↕<br>Connector-Terminal Block Conversion Unit (XW2B-40G4, XW2B-40G5) | |

## Recommended Power Supplies for MULTIPLE I/O TERMINAL Units

| Model | Specification | Manufacturer |
|---|---|---|
| S82K-05024 | 100 to 120/200 to 240 V, 50 W | OMRON |
| S82K-10024 | 100 to 120/200 to 240 V, 100 W | |
| S82J-5524 | 100 to 120 V, 50 W | |
| S82J-5024 | 100 to 120 V, 100 W | |

## MULTIPLE I/O TERMINAL Units

| Model | I/O Unit interface current consumption | Internal power supply and I/O power supply |
|---|---|---|
| GT1-ID16(-1) | 35 mA max. | --- |
| GT1-ID16MX(-1) | 35 mA max. | --- |
| GT1-ID16ML(-1) | 35 mA max. | --- |
| GT1-ID16DS(-1) | 35 mA max. | --- |
| GT1-ID32ML(-1) | 55 mA max. | --- |
| GT1-OD16(-1) | 35 mA max. | 9 mA max. |
| GT1-OD16MX(-1) | 35 mA max. | 9 mA max. |
| GT1-OD16MIL-1) | 35 mA max. | 9 mA max. |
| GT1-OD16DS(-1) | 35 mA max. | 9 mA max. |
| GT1-OD32ML(-1) | 65 mA max. | 11 mA max. |
| GT1-ROS16 | 50 mA max. | 250 mA max.<br>(inrush current: 30 A max.) |
| GT1-ROP08 | 40 mA max. | 350 mA max.<br>(inrush current: 30 A max.) |
| GT1-AD04 | 50 mA max. | Internal power supply: 100 mA max.<br>(inrush current: 20 A max.) |
| GT1-AD08MX | 50 mA max. | Internal power supply: 100 mA max.<br>(inrush current: 30 A max.) |
| GT1-DA04 | 50 mA max. | Internal power supply: 150 mA max.<br>(inrush current: 20 A max.) |
| GT1-DA04MX | 50 mA max. | Internal power supply: 100 mA max.<br>(inrush current: 30 A max.) |
| GT1-TS04T | 50 mA max. | Internal power supply: 80 mA max.<br>(inrush current: 10 A max.) |
| GT1-TS04P | 50 mA max. | Internal power supply: 80 mA max.<br>(inrush current: 10 A max.) |
| GT1-CT01 | 90 mA max. | 9 mA max. |

# Index

## A


Analog Input Units, 3
  averaging function, 103, 111
  conversion time, 104, 113
  input range, 23, 101, 109, 114
  open-circuit detection function, 103, 112
  power supply, 104, 112
  specifications, 98
Analog Output Units, 3
  conversion time, 136
  output range, 23, 126, 127, 132, 134
  specifications, 124
averaging function, 103, 111


## C


cleaning, 204
communications
  time/Slave, 192
communications cycle time, 191
Communications Units, 4
  baud rate settings, 38
  components, 37
  DIP switch settings, 37
  mounting on DIN track, 38
  node number settings, 38
  specifications, 36
Configurator, 13, 24, 114, 137
connecting cable, 22, 38, 89
connectors, 7
  Transistor Input Units, 49, 51, 54, 56, 59, 61, 63, 65
  Transistor Output Units, 74, 77, 79, 82, 84, 86, 88
Counter Unit
  count value reset, 179
  counting range, 178
  differential phase pulse inputs, 177
  input word functions, 185
  operation examples, 28
  pulse and direction inputs, 177
  reading the count value, 181
  specifications, 172


## D


dimensions
  I/O Units, 39
DIP switch settings
  Analog Input Units, 99, 107, 111, 114
  Analog Output Units, 125, 132
  Communications Units, 37


## E


Edit Device Parameters Window, 114, 116, 137, 142, 146, 155, 157, 159, 163, 166, 169
Edit Unit Parameters Window, 138, 170
errors
  processing, 11
  restarting count after, 33


## I


I/O allocation, 11
  fixed allocation, 11
  precautions, 15
  user-set allocation, 13
I/O configuration, 17
I/O points
  restrictions, 21
I/O response times, 190
  maximum, 191
I/O Units, 4
  connecting cable, 22, 38
  connecting to I/O, 23
  current consumption, 41
  dimensions, 39
  interface connectors, 38, 39
  interface cycle time, 193
  interface specifications, 8
  interface status, 15
  power supply wiring, 39
  replacing the cassette, 207
  specifications, 35
  weight, 41
indicators, 25
initialization, 10
inspection, 204


## M


maintenance, 204
models
  list of, 5
mounting
  on DIN track, 21, 38
MULTIPLE I/O TERMINAL

overview, 2

## O

open-circuit detection function, 103, 112
operating environment
precautions, x

## P

Parameter Setting Window, 115, 156
power supply, 22, 39, 104, 112
precautions
application, xi
general, x
I/O allocation, 15
operating environment, x
safety, x
present count value
reading, 31
Pulse Input Units, 3

## R

refresh time, 191
Relay Output Units, 3
Relay characteristics, 92
replacing relays, 206
specifications, 90
GT1-ROP08, 90
GT1-ROS16, 92

## S

Scan List Enable Switch, 24
Software Setting Enable/Disable, 114
specifications
Analog Input Units, 98
Communications Units, 36
I/O Units, 35
Relay Output Units, 90
Transistor Input Units, 44
Transistor Output Units, 66

## T

torques, xii
Transistor Input Units, 3
input specifications, 40
specifications, 44
GT1-ID16, 44
GT1-ID16-1, 46
GT1-ID16DS, 57
GT1-ID16DS-1, 60
GT1-ID16ML, 52
GT1-ID16ML-1, 55
GT1-ID16MX, 48
GT1-ID16MX-1, 50
GT1-ID32ML, 62
GT1-ID32ML-1, 64
Transistor Output Units, 3
output specifications, 40
specifications, 66
GT1-OD16, 66
GT1-OD16-1, 68
GT1-OD16DS, 81
GT1-OD16DS-1, 83
GT1-OD16ML, 76
GT1-OD16ML-1, 78
GT1-OD16MX, 71
GT1-OD16MX-1, 73
GT1-OD32ML, 85
GT1-OD32ML-1, 87
troubleshooting, 197
TS indicator, 43

# Revision History

A manual revision code appears as a suffix to the catalog number on the front cover of the manual.

Cat. No. W348-E1-06

Revision code

The following table outlines the changes made to the manual during each revision. Page numbers refer to the previous version.

| Revision code | Date | Revised content |
|---|---|---|
| 1 | December 1998 | Original production |
| 2 | January 2000 | Changed “CompoBus/D” to “DeviceNet” in most of the manual.<br>Notes on relationship of ambient temperature and maximum number of simultaneously ON points added to section 4.<br>Configurator graphics changed.<br>**Page xv:** Information on Low-voltage Directive removed.<br>**Page 3, 5, 7, 20, 24, 132, 165, 167, 176:** Information added on Temperature Input Unit.<br>**Page 36, 44, 96, 104, 115, 121, 132:** Noise immunity specification changed and three specifications removed.<br>**Page 44:** Input impedance added.<br>**Page 45:** Units added to current consumption table and precautions on 2-wire DC sensors added.<br>**Page 46, 48, 54, 56, 58, 60:** Maximum number of simultaneously ON points changed.<br>**Page 46, 48, 50, 52, 90:** Internal circuits diagram changed.<br>**Page 35, 54, 56, 58, 60, 75, 77, 80, 82:** “Available soon” note removed.<br>**Page 96, 115:** Current consumption specification changed.<br>**Page 102:** Voltage and current specification changed for open-circuit detection.<br>**Page 111:** Converted data graphic added for 4 points and conversion time changed.<br>**Page 115, 132:** Section added on offset and gain adjustments.<br>**Page 116, 123:** Pins 8, 9, and 10 changed.<br>**Page 120:** Description of output status for communications error changed.<br>**Page 118:** Wiring diagram changed.<br>**Page 151:** I/O response time graphics changed.<br>**Page 151:** Formula changed.<br>**Page 165:** Information added on Configurator.<br>**Page 177:** Power Supply Tap added to table.<br>**Page 179:** Power supply specifications changed in table. |
| 3 | October 2000 | Reprinted due to error. |
| 04 | April 2002 | **Page xiii:** Minor addition made to warning information.<br>**Page xv:** Paragraph added to first list.<br>**Page 12:** Several changes made to second diagram.<br>**Page 15:** Text added after table.<br>**Pages 62, 64:** Minor change made in first table.<br>**Pages 76, 81, 85:** Minor changes made to internal circuit diagrams.<br>**Page 216:** Several changes made to second and third tables. |

| Revision code | Date | Revised content |
|---|---|---|
| 05 | May 2003 | **Page 32:** “#0004” corrected to “#0C04” in ladder diagram . Information on word 53 bits 10 and 11 added.<br>**Page 33:** Bit 10114 added to ladder diagram .<br>**Page 184:** “×4” corrected to “×1” for differential phase pulse input when bit 10 and 11 are both ON. |
| 06 | September 2010 | Entire manual: Changed “PC” to “PLC.”<br>**Page v:** Deleted definition of “PC.”<br>**Page vi:** Added section called Read and Understand this Manual.<br>**Page xv:** Corrected EN number for Commission Emission Standard.<br>**Pages 4 and 6:** Changed description of I/O Unit Connecting Cables in text and figure.<br>**Page 7:** Changed model number of connectors made by MOLEX.<br>**Page 18:** Changed second title.<br>**Page 22:** Changed GCN specifications.<br>**Page 32:** Changed flag and bit address notation.<br>**Page 38:** Changed GCN specifications at bottom of page.<br>**Page 41:** Added note.<br>**Pages 49, 51, 72, 74, 109, and 134:** Changed MOLEX model numbers.<br>**Pages 62, 63, 64, 65, 85, 87, and 89:** Changed text in figure.<br>**Pages 69 and 74:** Changed internal circuit diagrams.<br>**Page 77:** Corrected pin function symbols.<br>**Pages 77, 86, and 89:** Added I/O Block model number to table.<br>**Page 158:** Added two figures.<br>**Pages 210, 211, 212, and 213:** Changed numbers in Value column.<br>**Pages 211, 212, and 213:** Change “No” to “Yes” in Set column.<br>**Page 216:** Changed company name in note.<br>**Page 217:** Changed table of I/O Unit Connecting Cables.<br>**Page 218:** Changed table of applicable connectors.<br>**Page 220:** Changed current consumption of GT1-ROS16 in table. |